Leil® SAUNAS

Construction Guide

Como 4-180



V070126

All wooden components are supplied unfinished and unprotected. A suitable finishing coat must be applied to all interior and exterior wooden surfaces immediately after installation.

Read the manual and check the parts for completeness before assembly!
Images are illustrative and may differ from reality, the construction principle is the same.

*** minimum space required for installation**

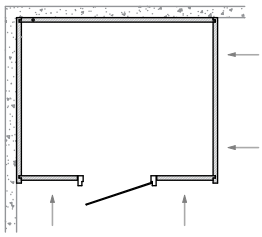

To place the sauna in a corner, assemble the wall logs first, then push it against the walls.

Layout Plan:

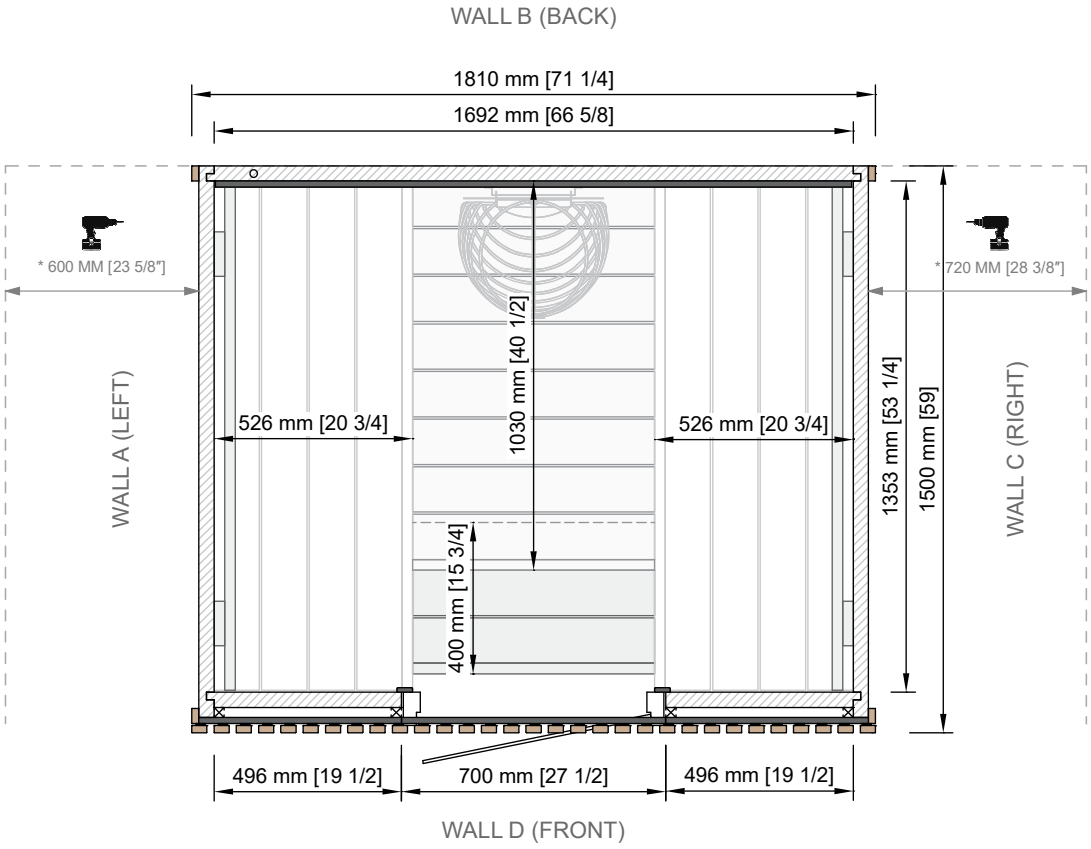

Cross Section:

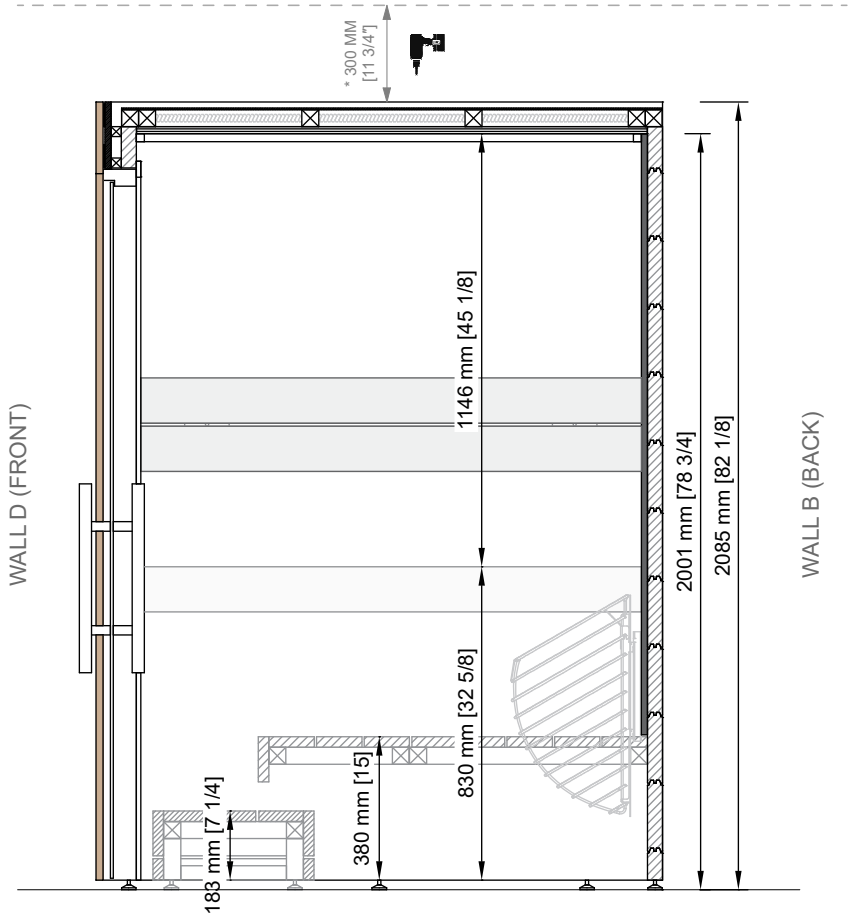

DETAILS LIST - Wall Logs:

Marking	Detail	Note	Length mm	Length in	Pcs.
007	40x188 [1 5/8″×7 3/8″] Wall Log		1732	68 1/4″	10+1*
006	40x85 [1 5/8″×3 3/8″] Wall Log		1732	68 1/4″	1
008	40x118 [1 5/8″×4 5/8″] Wall Log		1732	68 1/4″	1
005	40x118 [1 5/8″×4 5/8″] Wall Log		1732	68 1/4″	1
000	40x188 [1 5/8″×7 3/8″] Wall Log	*extra side wall logs (use only if nescessary)*	1487	58 1/2″	2*
010	40x188 [1 5/8″×7 3/8″] Wall Log		1460	57 1/2″	10
009	40x175 [1 5/8″×6 7/8″] Wall Log		1460	57 1/2″	1
011	40x93 [1 5/8″×3 5/8″] Wall Log		1460	57 1/2″	1
013	40x188 [1 5/8″×7 3/8″] Wall Log		1460	57 1/2″	10
012	40x175 [1 5/8″×6 7/8″] Wall Log		1460	57 1/2″	1
014	40x93 [1 5/8″×3 5/8″] Wall Log		1460	57 1/2″	1
004	40x188 [1 5/8″×7 3/8″] Wall Log		516	20 3/8″	10
002	40x85 [1 5/8″×3 3/4″] Wall Log		516	20 3/8″	1
003	40x188 [1 5/8″×7 3/8″] Wall Log		516	20 3/8″	10
001	40x85 [1 5/8″×3 3/4″] Wall Log		516	20 3/8″	1
	Hitting Block				2

Facade:

P-1	27x27 [1 1/8″×1 1/8″] Vertical post		2060	81 1/8″	4
P-2	27x27 [1 1/8″×1 1/8″] Horiz. post		690	27 1/8″	2
	20x40 [3/4″×1 5/8″] Deco. Slats		2060	81 1/8″	24+4*
	20x40 [3/4″×1 5/8″] Deco. Slats		190	7 1/2″	11+1*
	Facade panel: LEFT		536 x 2060	21 1/8" × 81 1/8"	1
	Facade panel: RIGHT		536 x 2060	21 1/8" × 81 1/8"	1
	Facade panel: CENTER		698 x 178	27 1/2" × 7"	1

Ceiling:

	Ceiling element 1		969 x 1431	38 1/8" × 56 3/8"	1
	Ceiling element 2		719 x 1431	28 1/4" × 56 3/8"	1

Doors:

U-1	Glass Door		690 x 1880	27 1/8" × 74"	1
	Door handle				1
	Screw Cover Caps				8

Moldings, Tapes, Sealing strips:

DI-0	21x21 [7/8″] Ceiling Molding	*Cut to length!*	2100	82 5/8″	4
UL-1	12x42 [1/2×1 5/8″] Door Molding	*Cut to length!*	2200	86 5/8″	3
	Rubber Sealing Strip	*For ceiling elements*	2800	110 1/4″	1

*** Spare parts included for replacement in case of damage or missing components.**

DETAILS LIST - Sauna Benches:

Marking	Detail	Note	Length mm	Length in	Pcs.
	Top Bench		500 x 1332	19 5/8" × 52 1/2"	2
	Bottom Bench 1		630 x 1684	24 3/4" × 66 1/4"	1
	Bottom Bench 2		400 x 1684	15 3/4" × 66 1/4"	1
	Step Bench		400 x 800	15 3/4" × 31 1/2"	1
	Horizontal Support 45x45 [1 3/4″×1 3/4″]				1
	Spacer Board	*install only without deco panel*	526 x 120 x 15	20 3/4"×4 3/4"×5/8"	2
	Backrest		246 x 1332	9 5/8" × 52 1/2"	2

Fasteners and Accesories:

	Adjustable Leg M8x40	+ *rubber pads*	Ø 38 mm	Ø 1 1/2"	14
	Plastic Fixing Clips	*for decorative slats*			104+1*
	Screw 6x13.5	*for fixing clips*			104+1*
	Screw 4.5x70				100
	Screw 4.5x60				250
	Screw 3.5x50				20
	Lost- Head Nail 40 mm				100
	Ventilation Valve Ø100 [3 7/8″]				1

Optional Extras - If Ordered Additionally:

	Decorative Back Wall Panel		1684 x 1593	66 1/4" × 62 3/4"	1
	LED Lighting Set 2	*for top benches only*			1
	LED Lighting Set 6	*for top benches and backrests*			1

*** Spare parts included for replacement in case of damage or missing components.**

Wall Assembly:

Top View

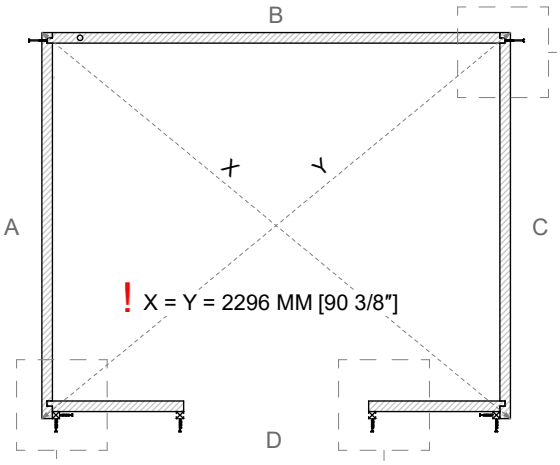

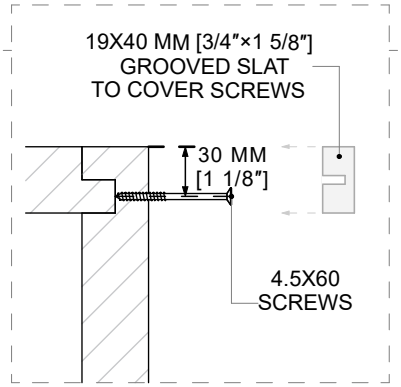

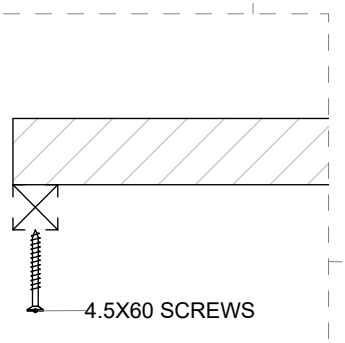

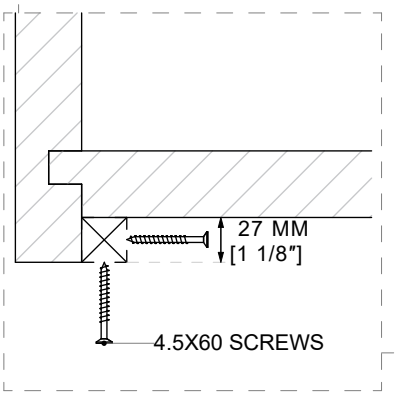

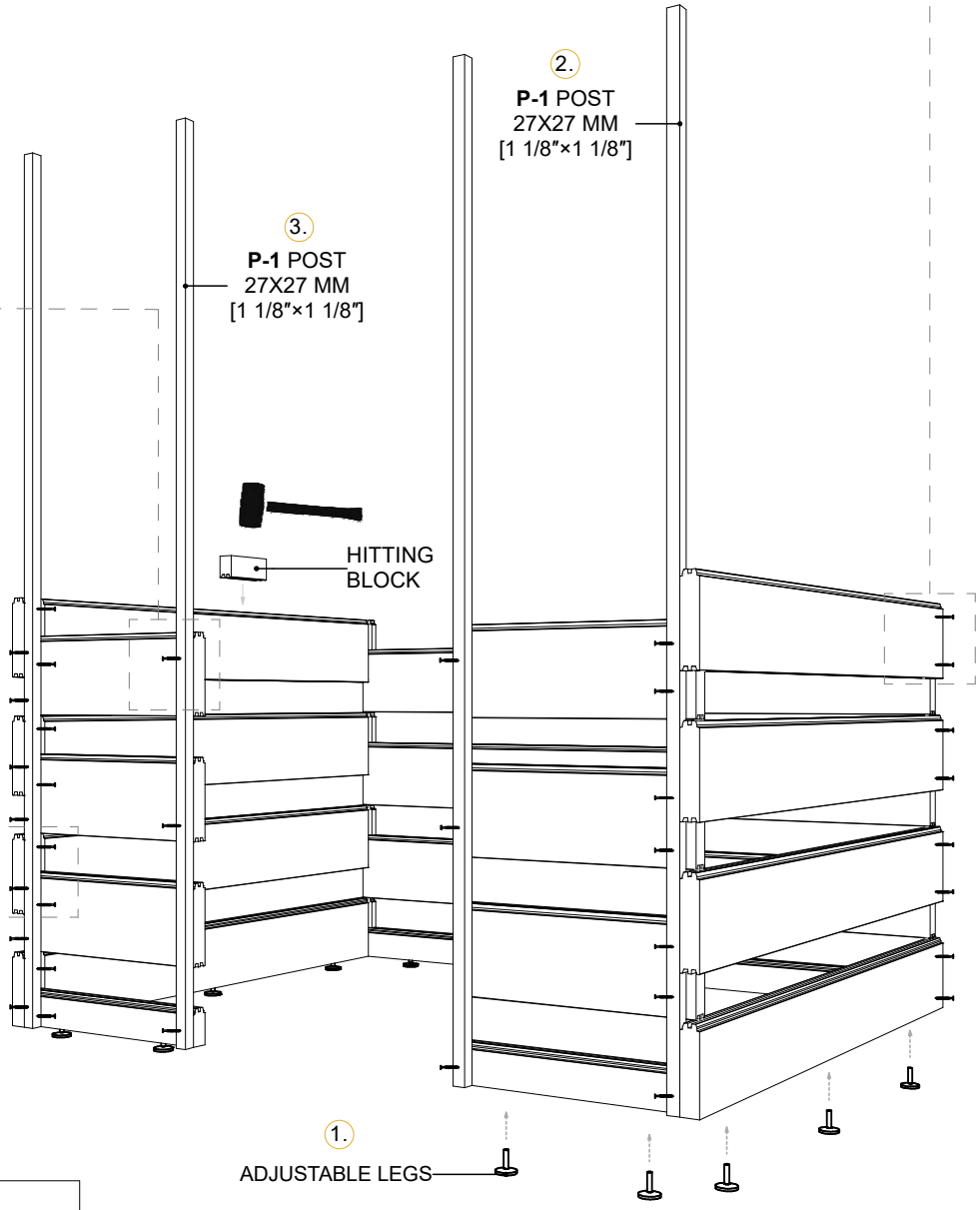

(#.) - installation sequence

Required Tools:

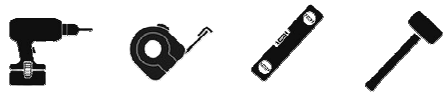

Wall Layout:

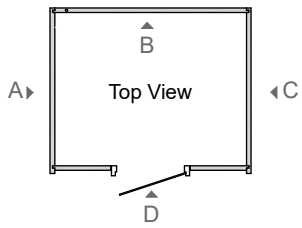

Continue stacking the wall logs according to the layout plan.
As you proceed, ensure that the pre-drilled cable conduit drillings are properly aligned.
To make ceiling installation easier, do not install the top wall log on the right wall at this stage.

WALL D (FRONT)
VIEW FROM THE OUTSIDE

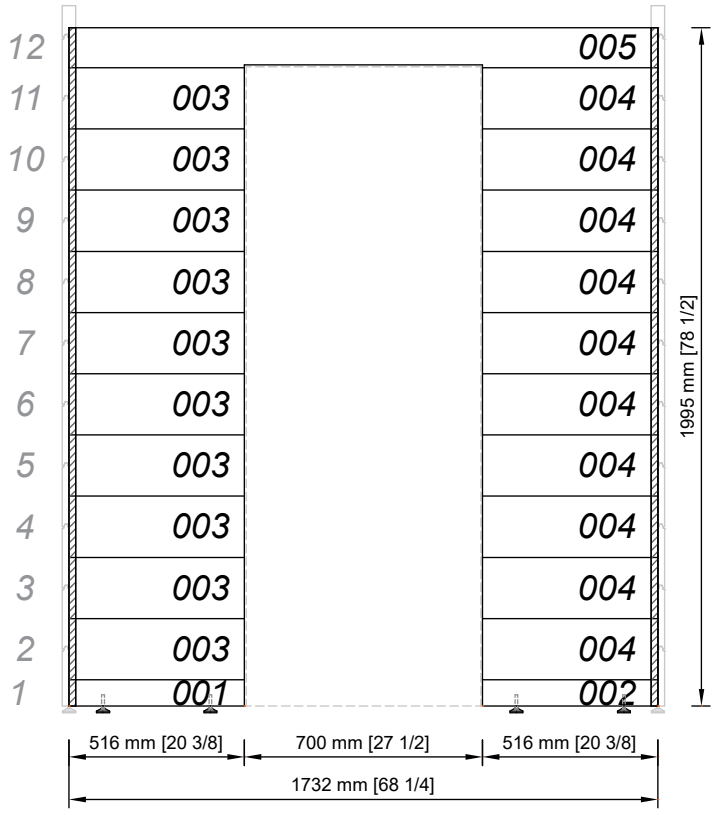

WALL A (LEFT)
VIEW FROM THE OUTSIDE

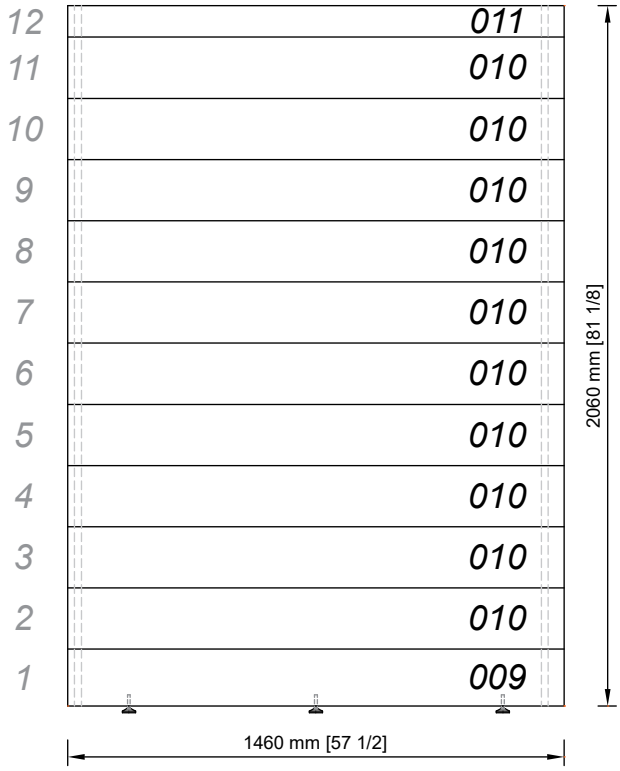

WALL B (BACK)
VIEW FROM THE INSIDE

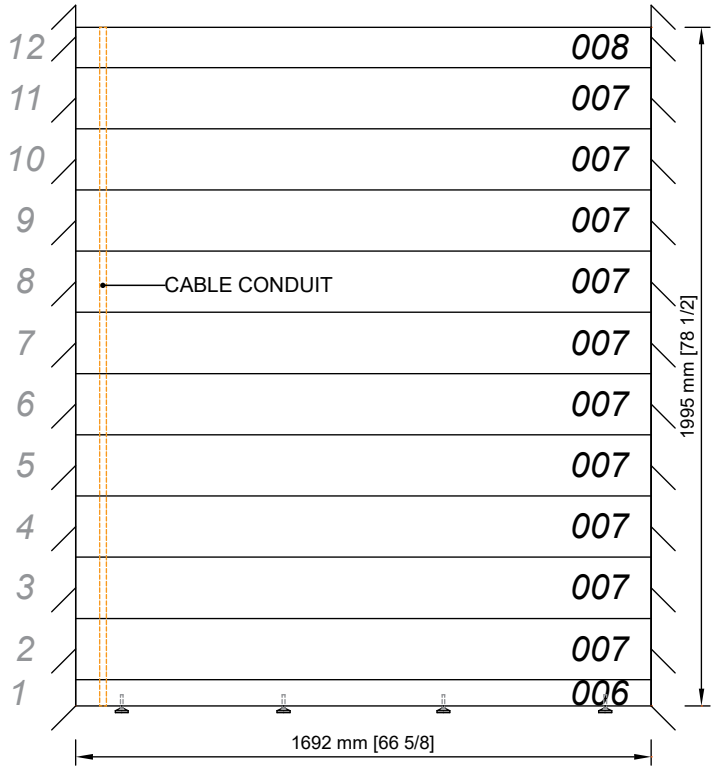

! INSTALL THE LAST WALL LOG AFTER THE CEILING ELEMENTS HAVE BEEN FITTED.

WALL C (RIGHT)
VIEW FROM THE OUTSIDE

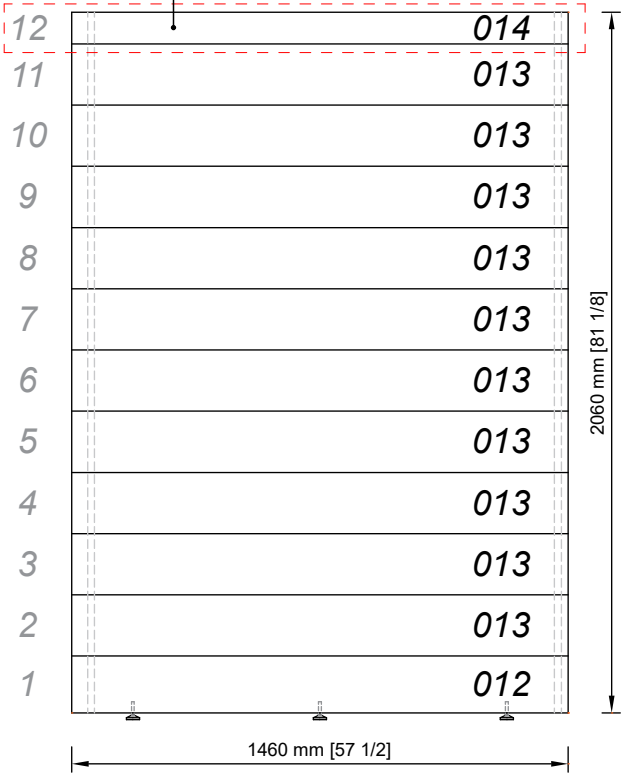

Ceiling Installation and Wiring:

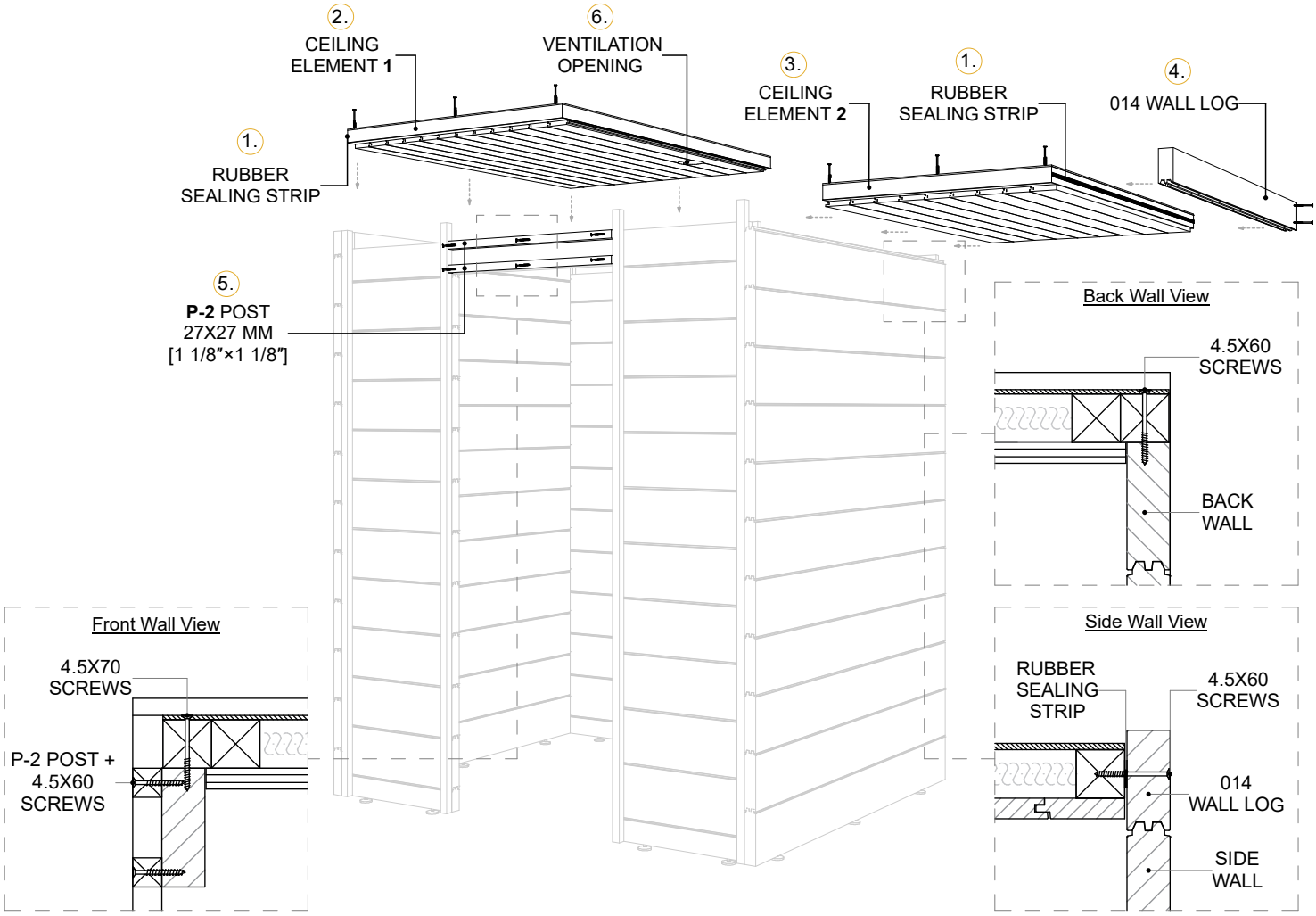

Electrical Wiring:

Choose the preferred side for installing the sauna controller, and plan the placement of the temperature sensors to ensure accurate readings and optimal performance.

Route the electrical wiring for the control panel, sensors and LED lighting under the sauna benches and behind the backrests (if ordered additionally) across the ceiling and along the front walls.

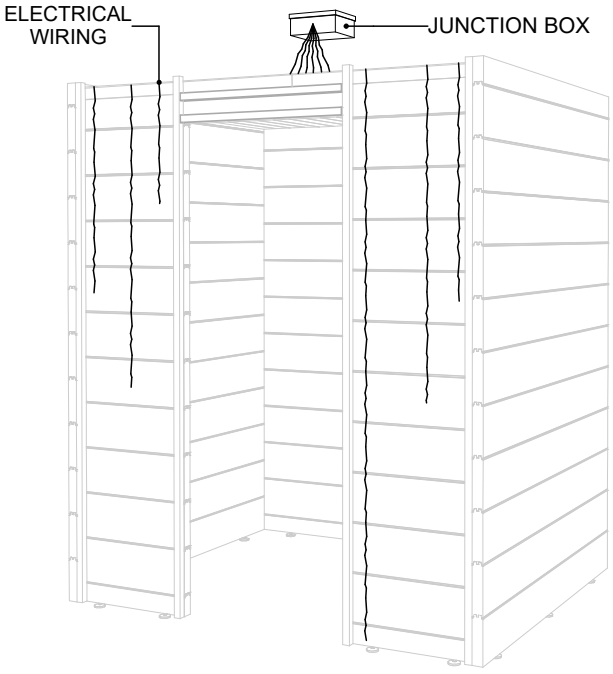

! **Complete these steps before attaching the facade panels.**

Connect the main power cable to the LED lighting wiring in the junction box.

The junction box can be placed on top of the ceiling elements for easy access and concealment, or in any other accessible location depending on site conditions.

! **Electrical installation must be carried out by a certified electrician to ensure safety and compliance with local regulations.**

Fixing Clip Mounting Layout:

! **Confirm that all electrical conduits, wiring, and associated components are completely installed, tested, and approved in their final locations prior to fixing the facade panels in place.**

Attach the fixing clips to the facade panels using 6×3.5 mm screws, following the provided layout.

! Ensure each clip is positioned correctly—the screw placement affects the spacing, so pay close attention to maintain even gaps between the decorative slats.

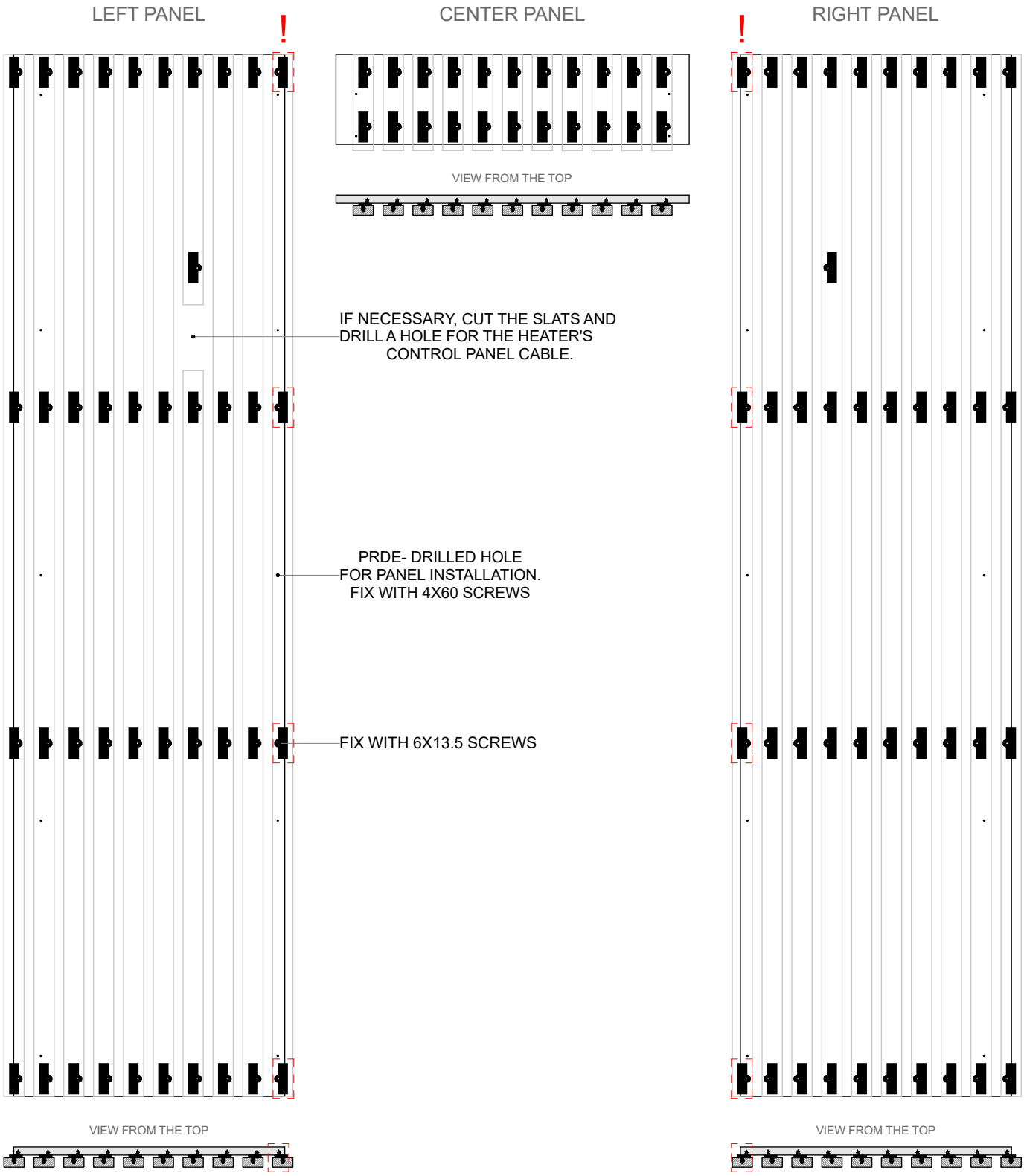

Door and Facade Panel Installation:

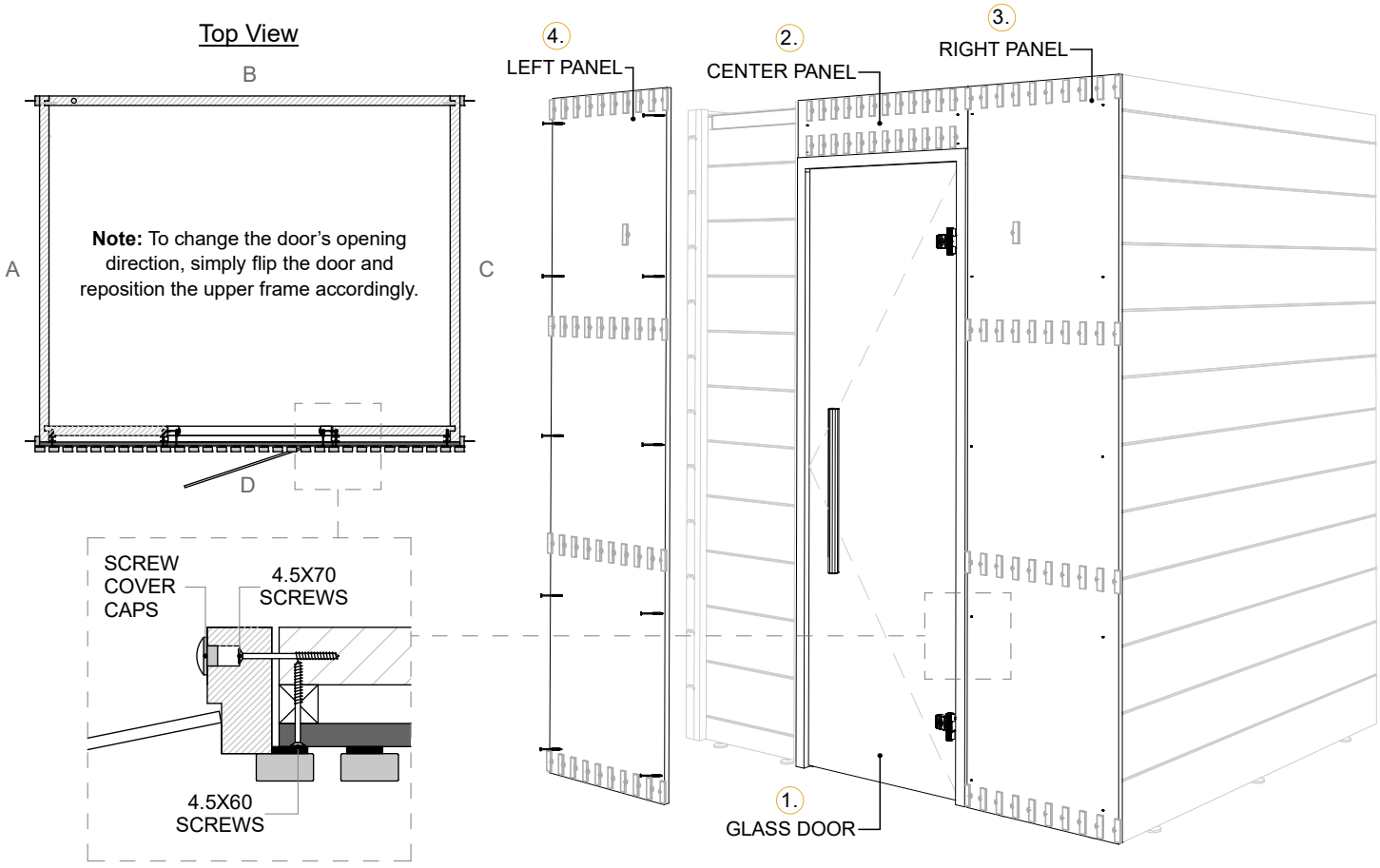

Decorative Slats:

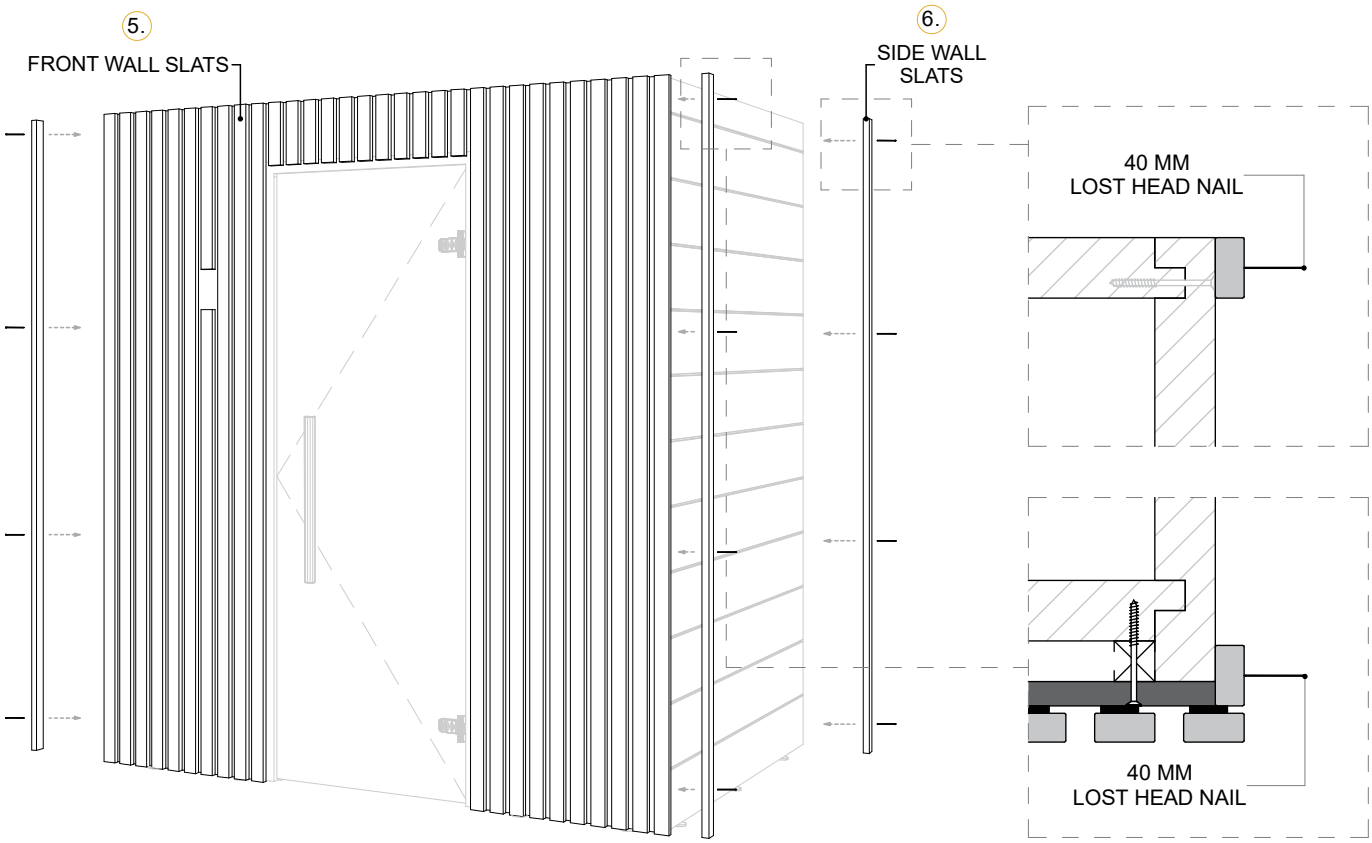

! Apply a suitable finish to the decorative slats prior to installation, then snap them securely into place.
Please note that the slats are not intended to be removed and reinstalled.
Spare slats are provided in case of installation errors.

Back Wall Panel, Ventilation, and Bench Supports

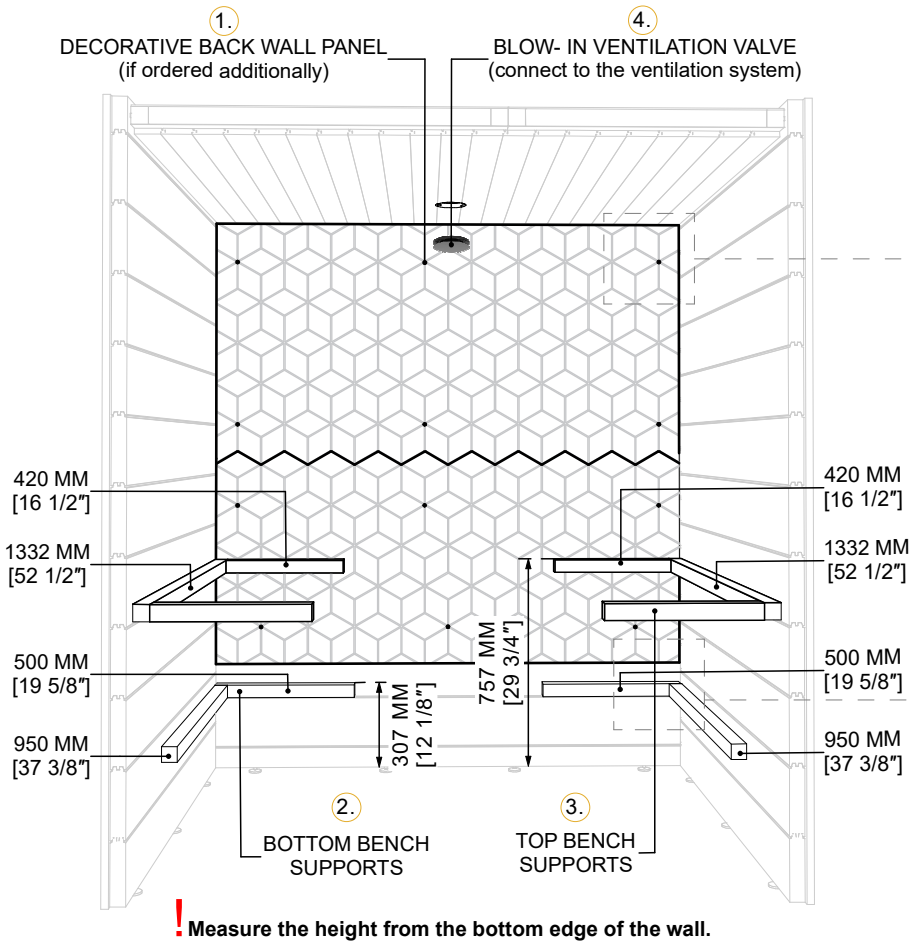

! **Measure the height from the bottom edge of the wall.**

DECO PANEL FIXING:

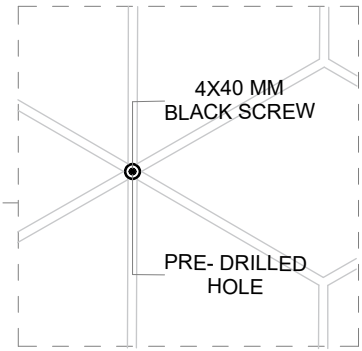

SAUNA BENCH FIXING:

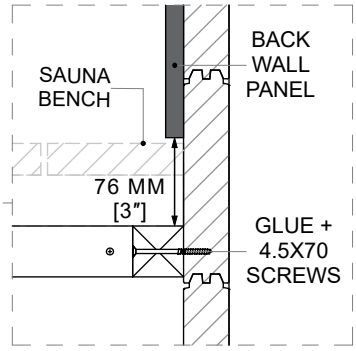

! *** It is recommended to apply wood glue in addition to screws.**

! If no optional deco back wall panel is ordered, install a 526x120x15 mm [20 3/4″×4 3/4″×5/8″] spacer board behind the top bench support at the front wall to compensate for the panel thickness and prevent gaps.
Fix the spacer using 3.5x50 screws.

SPACER FIXING:

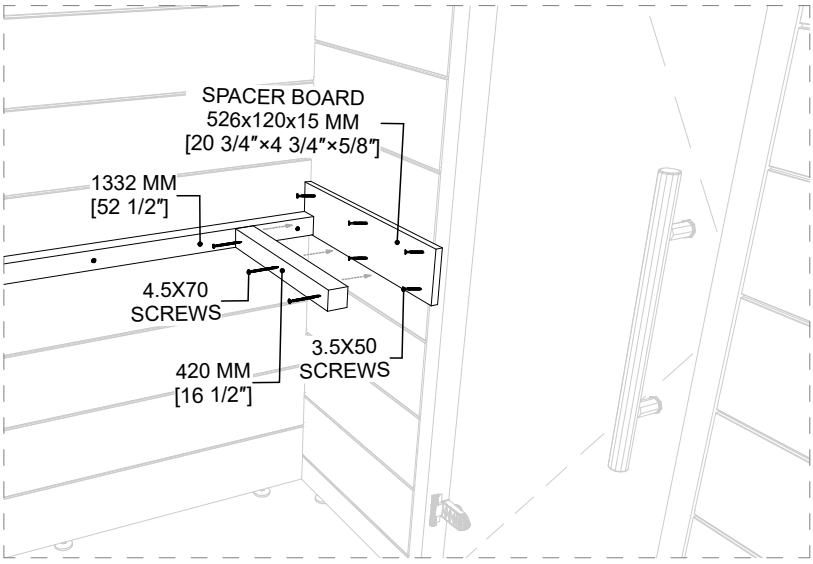

SPACER HEIGHT:

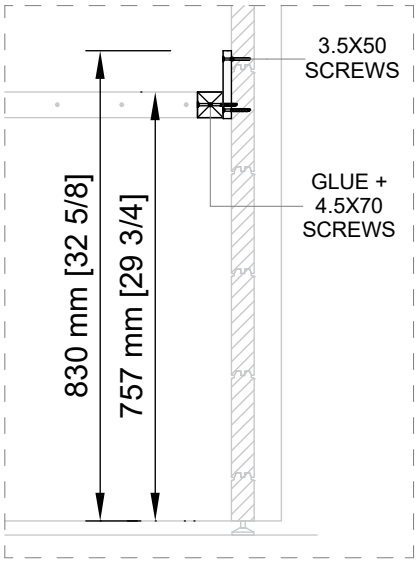

! **Measure the height from the bottom edge of the wall.**

Benches and Moldings

Backrests:
Install above the top bench, approx. 500 mm [19 5/8″] from the seat surface.
Use 3.5x50 mm screws.

LED Strips (if ordered separately):
Install the LED strips into the designated profiles behind the backrest and beneath the top bench.
Secure them using glue or silicone.

⚠ All electrical work must be done by a certified electrician.

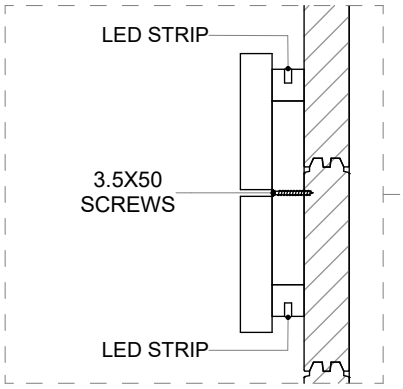

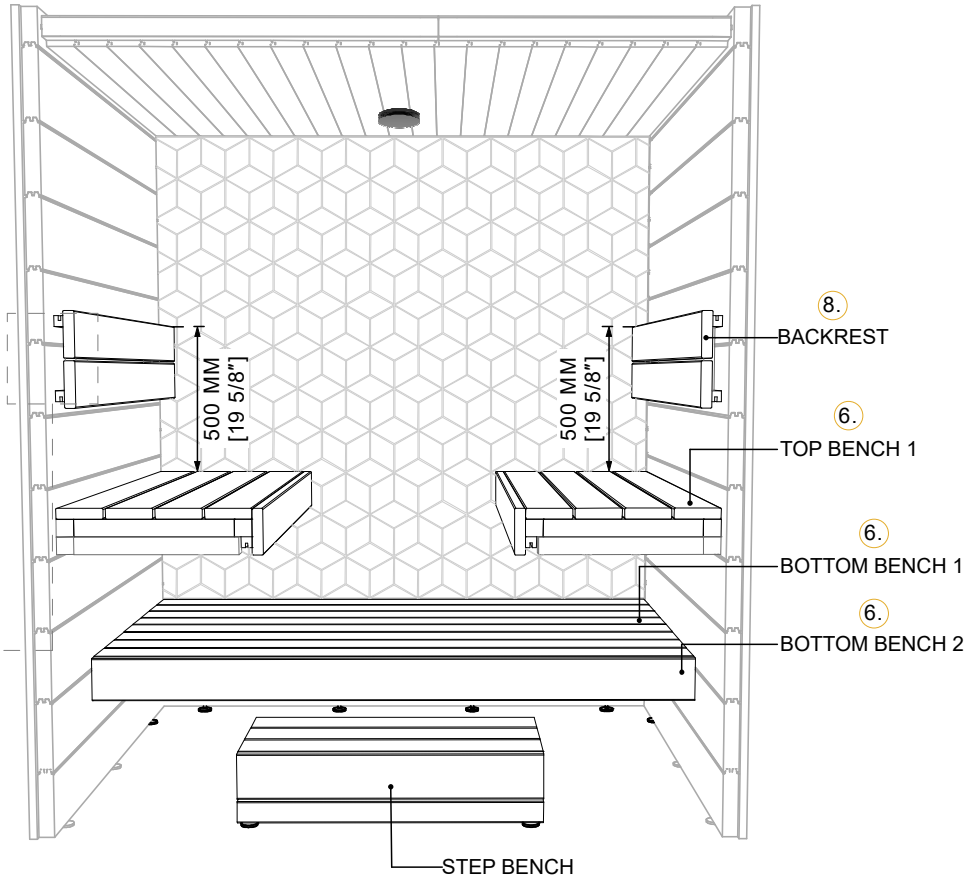

Moldings:
Measure and cut to size.
Trim corners at 45° for a neat joint.
Fix with 40 mm headless nails, spaced evenly.

! If no optional deco back wall panel is ordered and a spacer board is installed, cut the door molding above it and continue below.

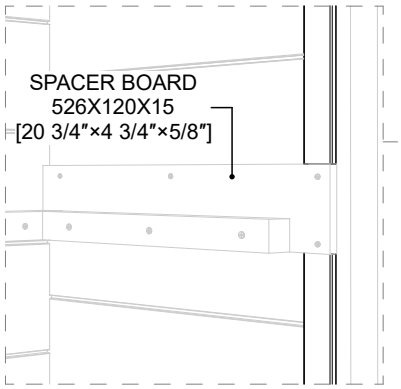

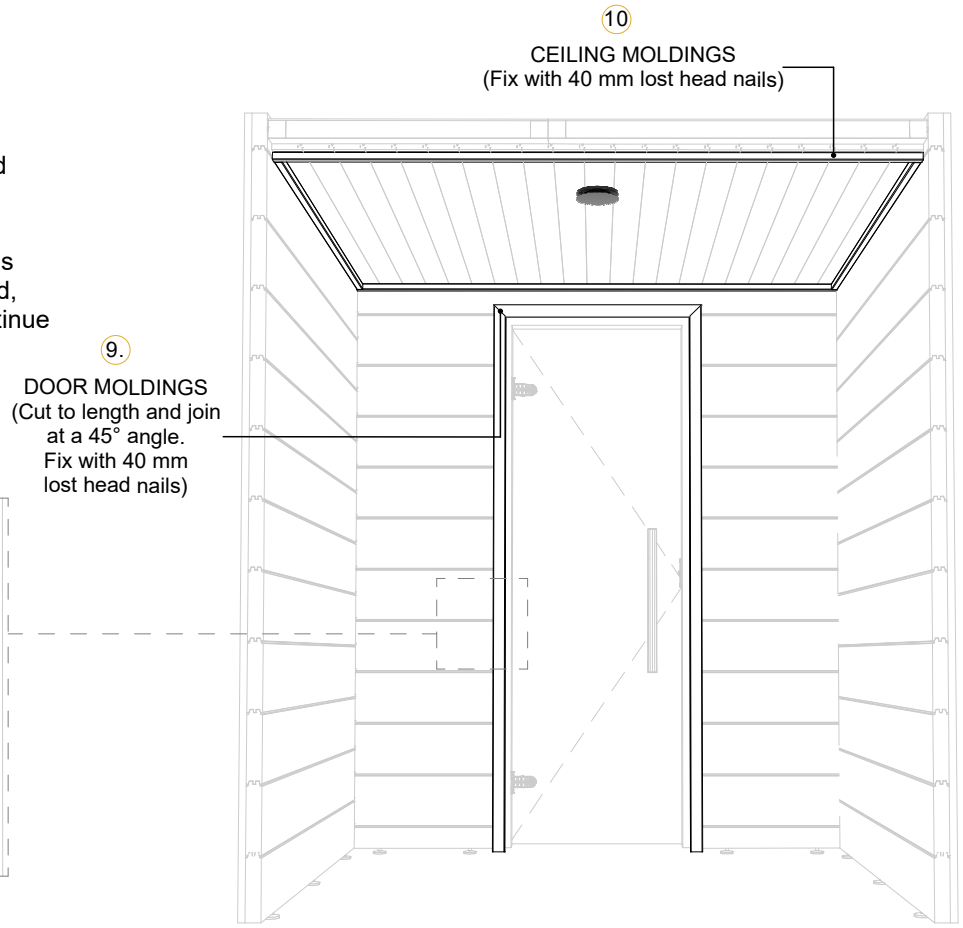

Safety Requirements and Maintenance

Safety Requirements

Electrical Safety:
Only a certified electrician should install or service the sauna heater.
Use a properly grounded, sauna-rated power supply. Do not use extension cords or power strips.

Ventilation:
Ensure adequate ventilation to allow fresh air circulation and prevent overheating or humidity buildup.
Proper ventilation ensures a steady flow of fresh air, helps maintain a consistent temperature, removes excess humidity, and prevents mold or wood damage.

Heater Placement & Use:
Keep flammable materials (e.g. towels, paper, clothing) away from the heater.
Never cover the heater or place objects on it.
Follow the manufacturer's guidelines for sauna stone placement.

User Safety:
Limit sauna sessions to 15–20 minutes.
Stay hydrated and exit immediately if you feel dizzy, nauseated, or uncomfortable.
Children must be supervised at all times.
Pregnant individuals and people with heart conditions should consult a doctor before use.

Fire Safety:
Keep a smoke detector and fire extinguisher nearby (outside the sauna room).
Do not use candles or open flames inside the sauna.

Maintenance Guidelines

Wood Protection (Required):
Treat all wood surfaces with sauna-safe, heat-resistant finish after installation.
Reapply as needed to prevent damage.

After Use:
Leave the door open to allow moisture to escape and air to circulate.
Wipe down benches and walls with a damp cloth to remove sweat and residue.
Weekly inspect the heater and stones for cracks or displacement.
Clean the floor to remove dirt and debris.
Monthly check for signs of mold or mildew and clean with a mild sauna-safe disinfectant if needed.
Tighten screws and fittings if any parts have loosened.
Annually replace sauna stones if they are cracked or crumbling.
Have a licensed technician inspect the electrical components and heater performance.

General Tips:
Avoid harsh cleaners; use only non-toxic, sauna-safe products.
Use towels on benches to reduce sweat buildup and protect wood surfaces.
Re-oil or lightly sand wooden surfaces if they become dry or splintered (only with appropriate products).

⚠ Important Notice

Failure to follow these safety and maintenance requirements may result in damage not covered by warranty and may lead to limitation or voiding of the manufacturer's warranty.