PATIO XXS THERMO SAUNA



INSTALLATION MANUAL

V191124

Instructions

1. It is recommended to install the sauna above ground level to prevent the base frame from coming into direct contact with the ground. Use a water-resistant material, such as bitumen strips, between the base frame and the base surface for added protection.

2. Ensure that the surface on which you install the sauna is level and stable both before and after installation. Otherwise, the sauna doors may not open and close properly later on.

3. During the first heating of the sauna, it must be closely supervised, and the doors should remain open, as the stove may emit a specific odor when heated for the first time. For more information, please refer to the user manual for the sauna stove.

4. The maximum permitted temperature in the steam room is +90 °C. Heating the sauna to a higher temperature may result in overheating.

5. To prevent damage from the weight of snow in winter, any snow should be removed from the roof of the sauna. Be careful not to damage the roof covering during the snow removal process.

6. If your sauna has lighting, install a 3G 2.5 mm outdoor power cable and connect it according to the schematics provided with the plug socket coupler. The sauna's power cable must be connected to a residual-current circuit breaker. If you have any questions, consult an electrician.

Required tools


Tape measure


Cutting knife


Respirator


Pencil


Battery drill


Scissors


Level


Nail gun


Tin shears


Rubber mallet


Circular saw


Pliers


Hammer


Gloves


Hole saw Ø 100 mm


Hand saw


Safety goggles


Jigsaw


Silicone gun


Foam gun

Floor plan

WALL 1 (back)

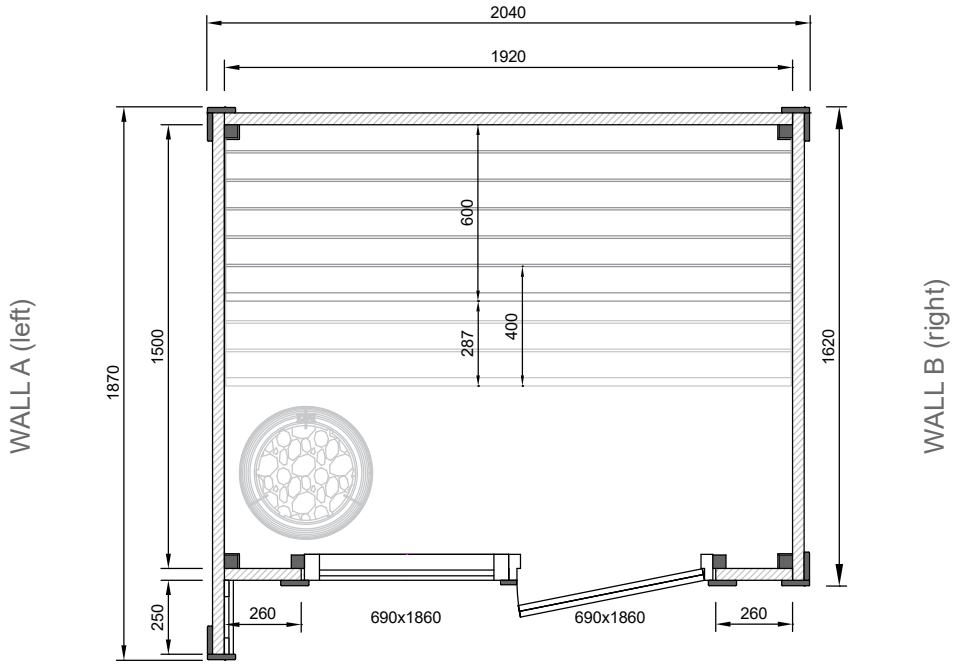

WALL 2 (front)

Cross section

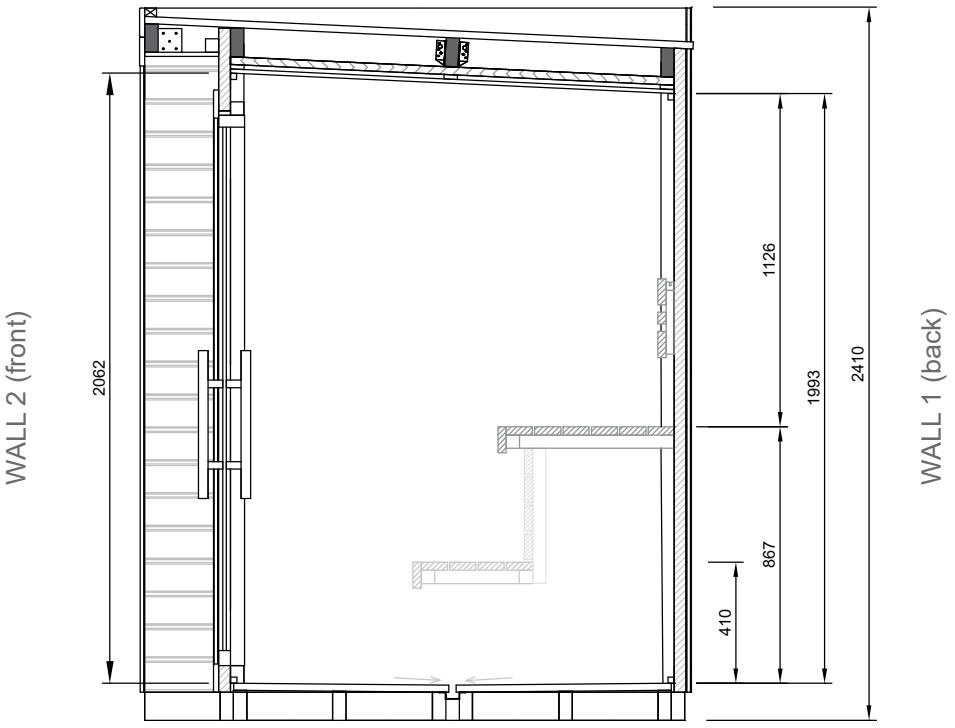

DETAILS LIST - Wall Logs:

Marking	Detail	Image	Note	Length	Pcs.
01	40x138 Wall Log Thermo			1920	18
EXTRA	40x138 Wall Log Thermo			1920	2
01B	40x96 Wall Log Thermo		*Height: 96 mm*	1920	1
01C	40x34 Wall Log Thermo		*Height: 34 mm*	1920	1
01D	40x138 Wall Log Thermo		*Cutout!*	1920	1

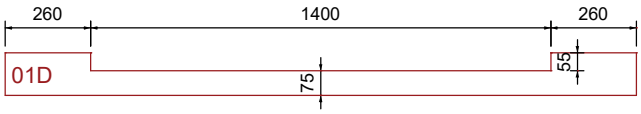

01F	40x30 Roof Block			1920	1
02	40x138 Wall Log Thermo			1830	17
02B	40x102 Wall Log Thermo		*Height: 102 mm*	1830	2
02C	40x138 Wall Log Thermo		*Cutout!*	1830	1

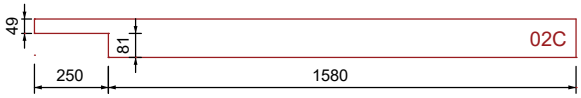

03	40x138 Wall Log Thermo			1580	16
04	40x138 Wall Log Thermo			260	28
EXTRA	40x138 Wall Log Thermo			260	4
	Hitting Block				2

Base Frame:

AR-1	45x95 Base Frame			1900	8
AR-2	45x95 Base Frame			1825	1
AR-3A	45x95 Base Frame		*Cutout!*	1570	1

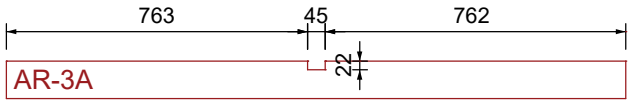

VR-1	Drainage detail			1965	1

Floor and roof boards:

KL-1	24x120 Roof Board			1850	18+2
PL-1	24x120 Floor Board			730	36+2

Posts and Beams:

T-1	45x95 Ceiling Beam			1920	2
T-2	45x95 Ceiling Beam			1825	2
P-1	45x45 Corner Post			2190	2
P-2	45x45 Corner Post			2120	2
UR-1	45x45 Door/ Window Frame			1950	2
T-3	45x45 Ceiling Beam			1920	1
AT-1	45x45 Temporary Support			~1800	8
UR-2	45x45 Door/ Window Frame			1380	2

DETAILS LIST - Slats and Moldings:

Marking	Detail	Image	Note	Length	Pcs.
L-1	18x95 Corner Molding		*Cut to length!*	~2400	2
EXTRA	18x95 Corner Molding		*Cut to length!*	~2400	1
L-2	18x95 Roof/ Corner Molding		*Cut to length!*	~2200	11
UL-1	18x95 Door Molding			1925	2
UL-2	18x95 Door Molding			1600	1
UL-3	18x95 Door Molding			1360	1
LED-1	15x55 Distance Slat		*for LED under sauan benches*	2400	2
DI-1	15x55 Distance Board for Outer Lining			2240	2
DI-2	15x55 Distance Board for Ceiling and Outer Lining			1915	1
UL-4	15x55 Door Molding			1830	1
DI-3	15x55 Ceiling Distance Board			1825	2
DI-00	21x21 Ceiling and Floor Molding		*Cut to length!*	~2100	8
DI-0	50X50 Corner Post Molding		*Cut to length!*	~2100	4+1

Lining Boards:

STP-1	15x90 Ceiling Board		*Thermo spruce*	1495	24+2
STP-2	14x121 Outer Lining Board			250	38+2

Slope Veneers:

	3 mm Floor slope veneer			1900	2
	6 mm Floor slope veneer			1900	2

Insulation, Finishing, Tapes:

	SPU Insulation Panel 30x600x1200				5
	Foil Tape		for SPU insulation panels	10 m	2
	Moisture safety tape		for all outside corners	10 m	1
	Transparent silicone		for all outside corners		5
	Black Paint		for paint repair	0,9 L	1
	Gunfoam		for door and window insulation		1

Doors and Windows:

U-1	Glass Door 88x690x1860		+ door handle		1
A-1	Window 88x690x1860				1
	Wooden Cover Caps				16

DETAILS LIST - Mounting Accessories:

Marking	Detail	Image	Note	Length	Pcs.
	Joist Hanger 45x97		for fixing 45x95 beams		2
	Metal Corner Bracket 60x60x60		*for ceiling beam*		2
	Screw 6x180		*for wall logs*		200
	Screw 5x90		*for base frame*		40
	Screw 5x40		*for joist hangers*		16
	Screw 4.5x70				450
	Screw 3.5x50		*for floor boards*		150
	Screw 3x40	black	*for black moldings*		200
	Nail 70 mm		*for roof boards*		200
	Lost-head nail 40 mm		*for STP-1 ceiling boards*		350
	Ventilation Valve Ø100		*wood*		1
	Ventilation Grid Ø100		*metal*		5

Roof Covering:

	EPDM Rubber Roof Cover 2x3.05 m				1
	EPDM Glue		2.5 l		1
	EPDM Quickprime		125 ml		1
	Splice Tape		for back wall metal drip edge	1.93 m	1
	Paint roller + Handle + Sanding pad				1
	Metal Drip Edge		for back wall *Cut to length!*	2050 mm	1
	Metal roofing sheet		for front and side walls. *Cut to length!*	2100 mm	3
	Black Roofing Screw 4.8x25		for side walls metal roofing sheets		50
	Black Wronic Screw 4.2x25		for back wall metal drip edge		30

Sauna Benches - Standard Set:

Marking	Detail	Image	Note	Length	Pcs.
	Bench Module 600 mm		*Top bench*	1913	1
	Bench Module 400 mm		*Bottom bench*	1913	1
	Bench Skirt			1913	1
	Bench Horizontal Support Set 45x45				1
	Backrest			1810	1

STEP 1 - Base frame

1.1 Connect the base frame details according to Scheme 1.1.
Make sure that the frame is level and that the diagonals are equal (X = Y). Leave a 45 mm gap between two AR-1 base frame details so that the water drainage detail VR-1 can be fitted between them.
Use a level, a battery drill, and 5x90 screws to join the base frame together.



1.2 Place the VR-1 drainage detail on top of the base frame.
No fixings are needed.
Caution! The detail has sharp edges; use gloves.



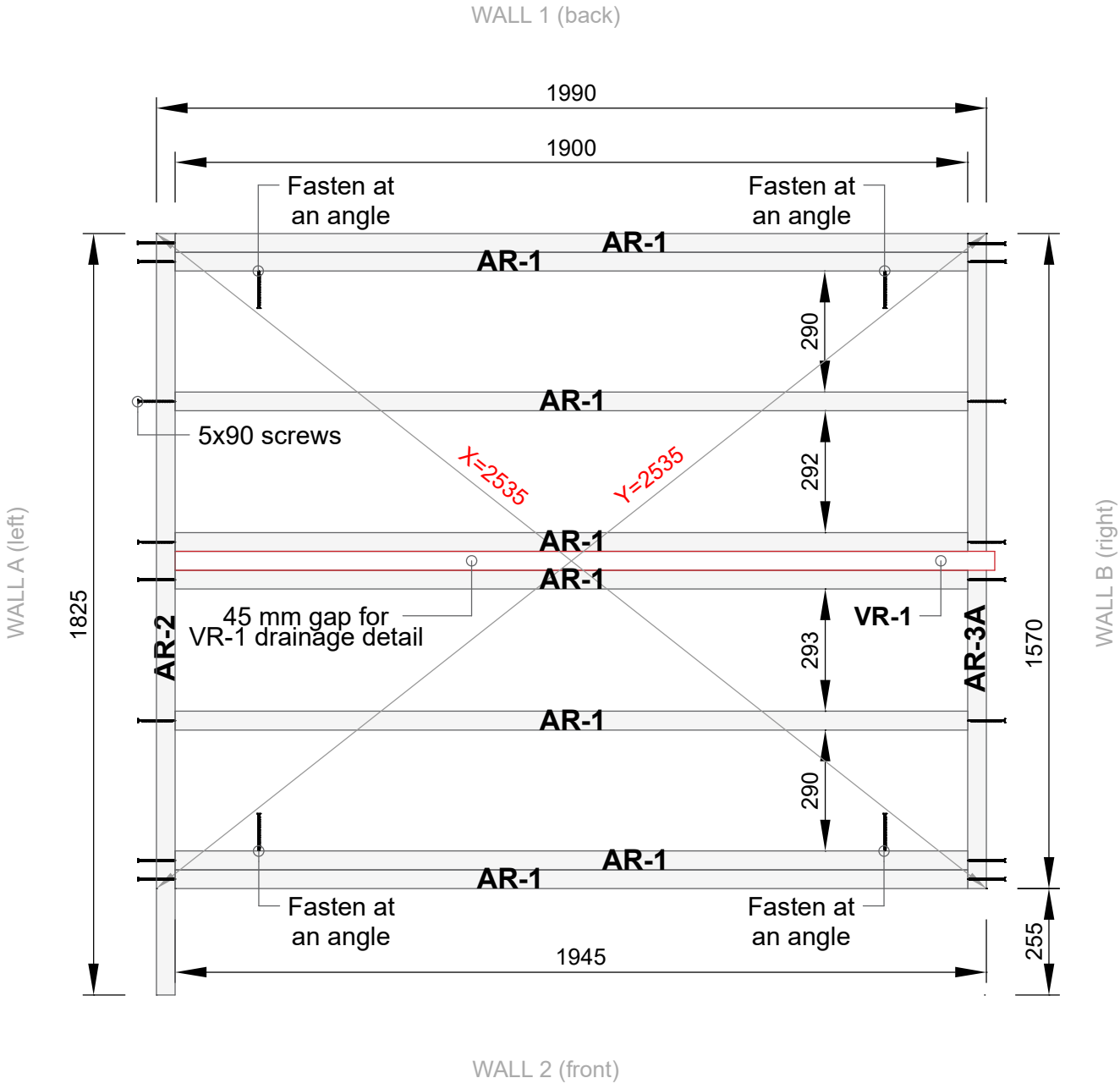

Scheme 1.1

STEP 2 - Walls

2.1 Place the first row of wall logs on the base frame according to Scheme 2.1. Make sure that the wall logs protrude 5 mm outward from the base frame on all sides. Use 6x180 screws to fix the wall logs to the base frame. Add silicone in the groove of every wall log between each row.
Suggestion: Pre-drill the holes for the screws to prevent wall logs from splitting.



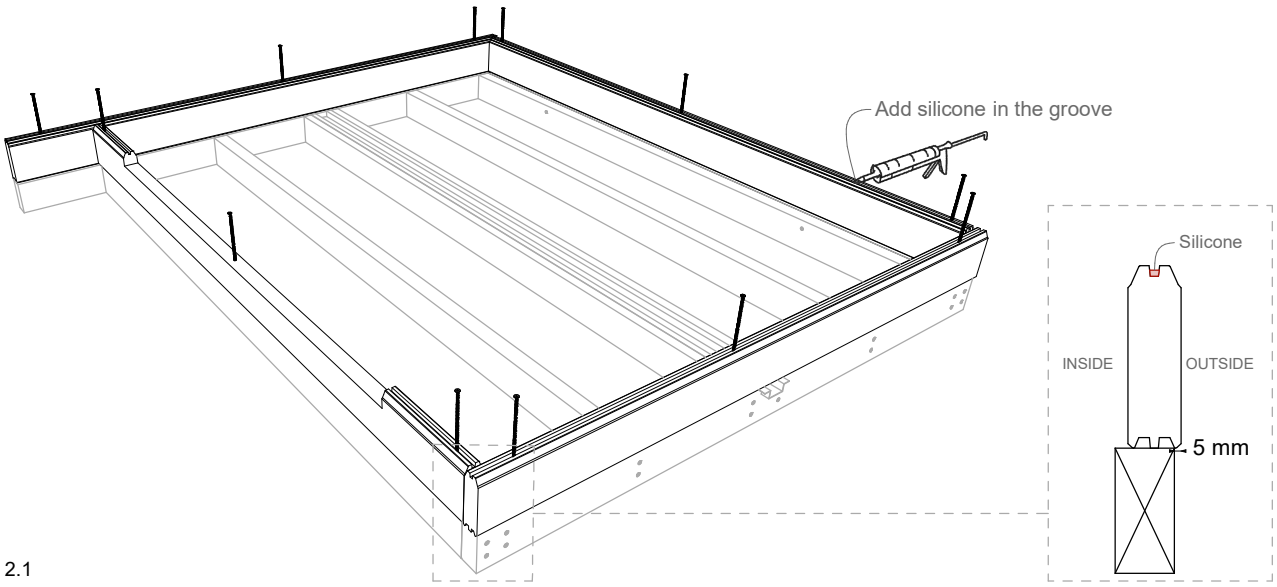

Scheme 2.1

2.2 Place the second row of wall logs on top of the first row. Use a hitting block and a rubber mallet to set the logs in place. Attach the second row to the first using 6x180 screws and a battery drill.
Suggestion: Pre-drill the holes for the screws to prevent wall logs from splitting.



2.3 Install corner posts in the inner corners. Leave a 45 mm gap at the bottom, between the corner posts and the base frame. Use 4.5x70 screws and a drill to fix the corner posts to every wall log (Scheme 2.2).
Suggestion: Pre-drill holes for the screws to prevent the posts from splitting.



2.4 Vertically level the corner posts and temporarily attach AT-1 details to them for support and to keep the posts in a level position.
Use a level, 4.5x70 screws, and a battery drill.

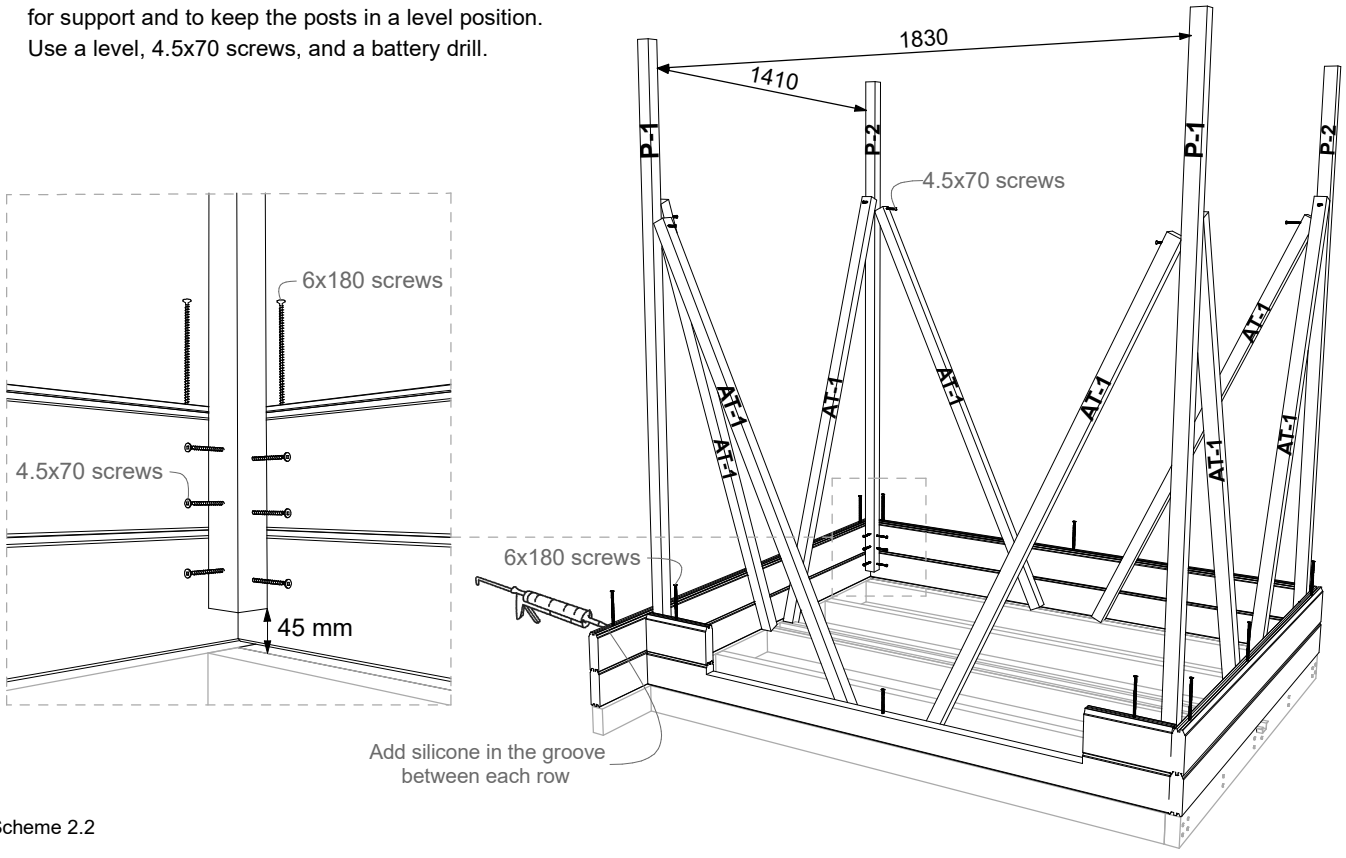

Scheme 2.2

STEP 2 - Walls

2.5 Continue to install the wall logs on top of each other according to the "Wall Layout" scheme on page 9. Use 6x180 screws to connect all wall logs to each other and 4.5x70 screws to fix all logs to corner posts, like shown in Scheme 2.3. Add silicone in the groove of every wall log between each row.



2.6 Remove the AT-1 temporary support details after all wall logs have been installed.

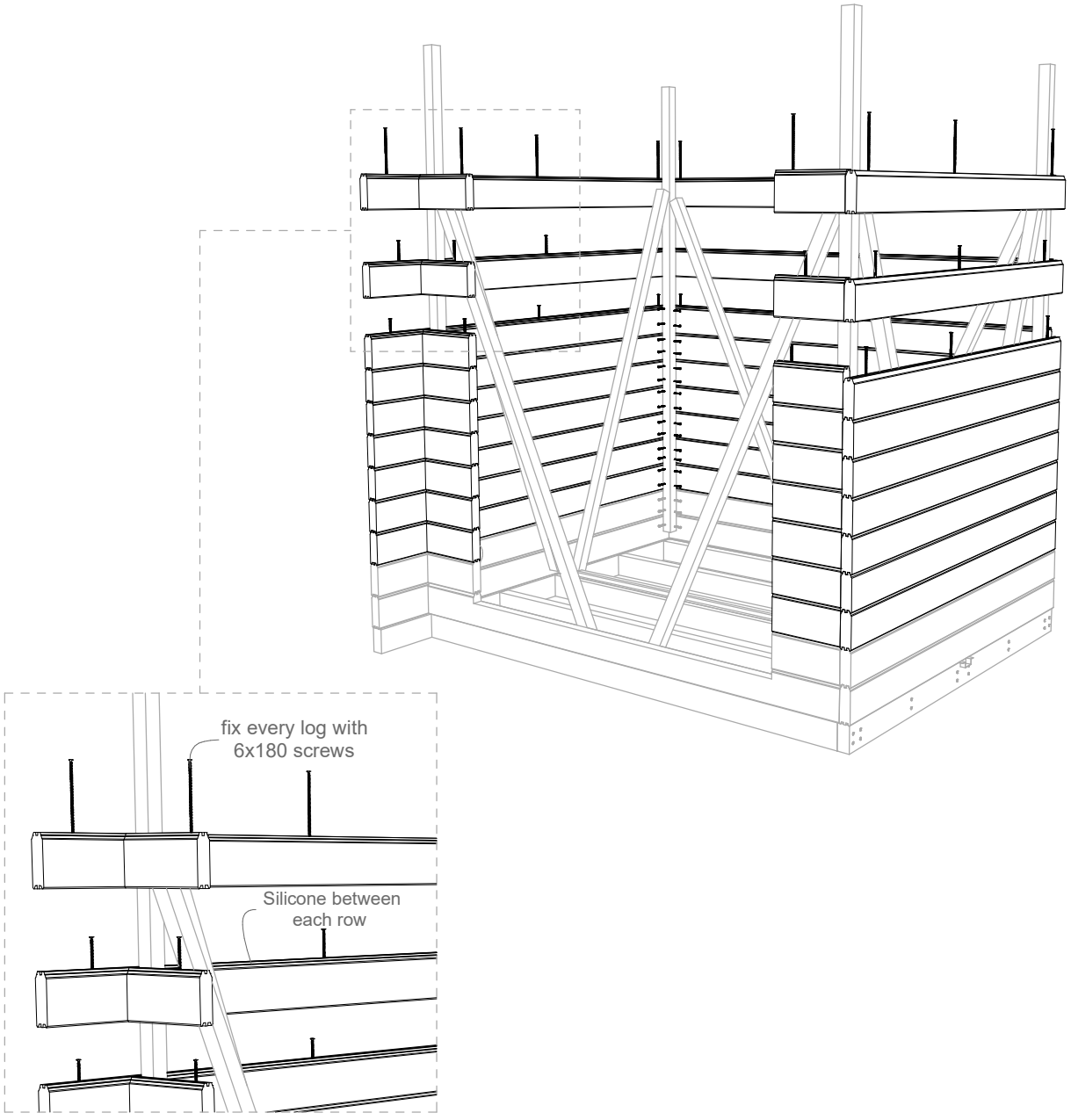

Scheme 2.3

For installation of walls, please see the placement of the wall logs on the "Wall Layout" scheme on page 9.

WALL LAYOUT

* Connect all wall logs together using 6x180 screws.

* Connect all wall logs to corner posts using 4.5x70 screws

Wall 2 (front)

View from the outside

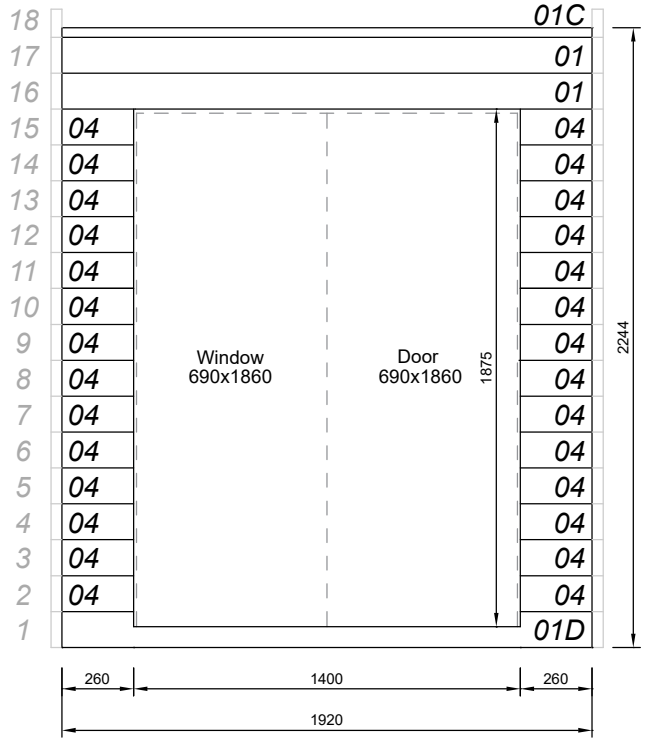

Wall A (left)

View from the outside

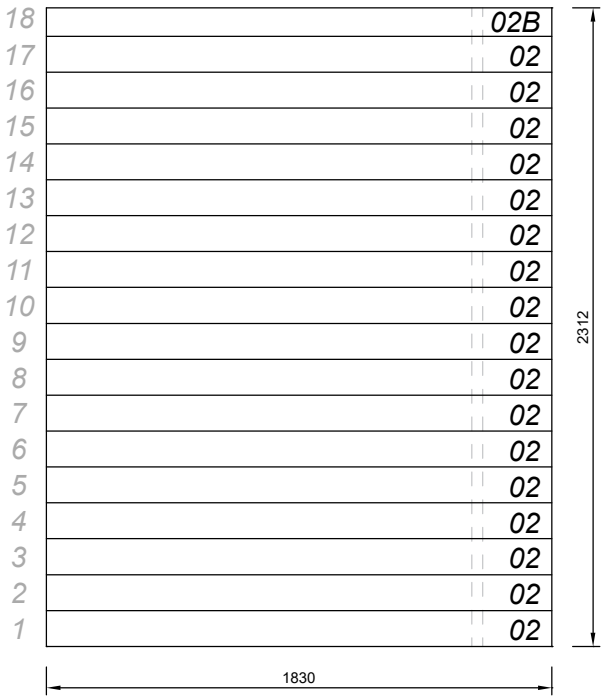

Wall 1 (back)

View from the outside

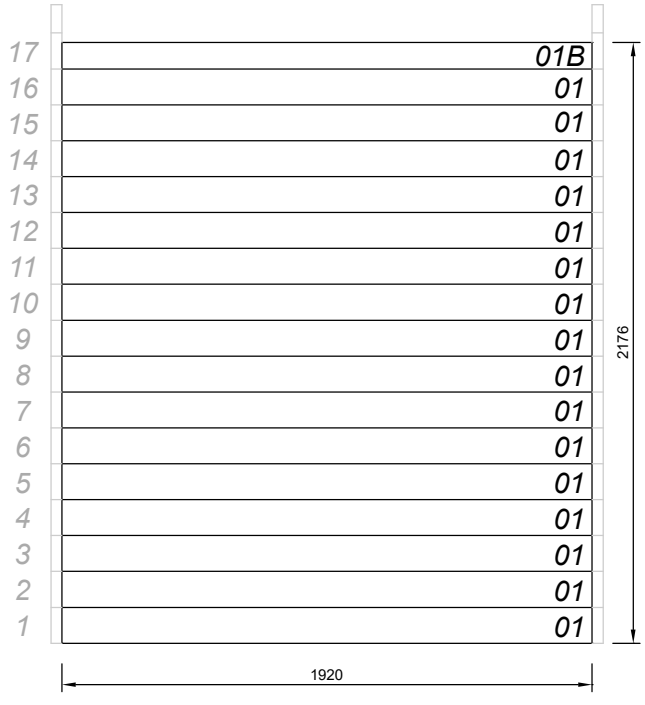

Wall B (right)

View from the outside

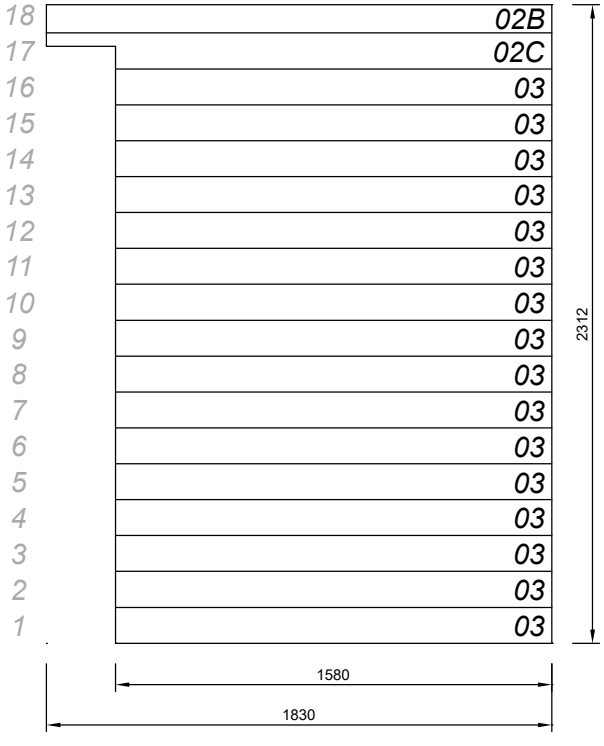

STEP 3 - Roof boards and ceiling

3.1 Attach the T-2 beams to the front and back walls. Leave ~2 mm gap at both ends. Make sure that the top side of the beam is flush with the upper edge of the front and back walls. Use 4.5x70 screws and a drill to fix the beams to the walls (Scheme 3.1).

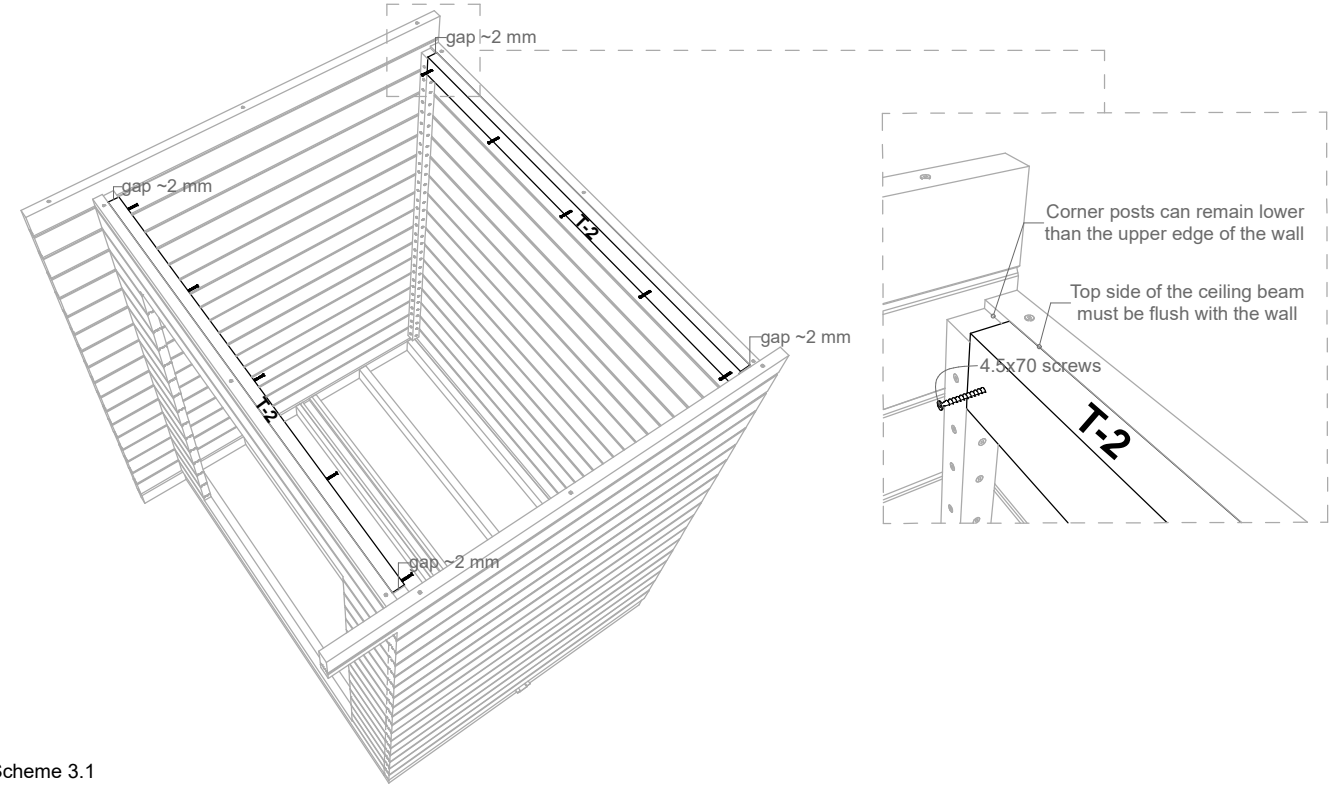

Scheme 3.1

3.2 Temporarily lay one KL-1 roof board or some other straight detail on top of the front and back walls. Mark the diagonal that forms under the detail on the side walls with a pencil. These markings will determine the installation height of the T-1 ceiling beam. Measure out the distance from the T-2 beams and mark the locations on both side walls, like shown in Scheme 3.2. These markings will indicate the spacing between the ceiling beams.

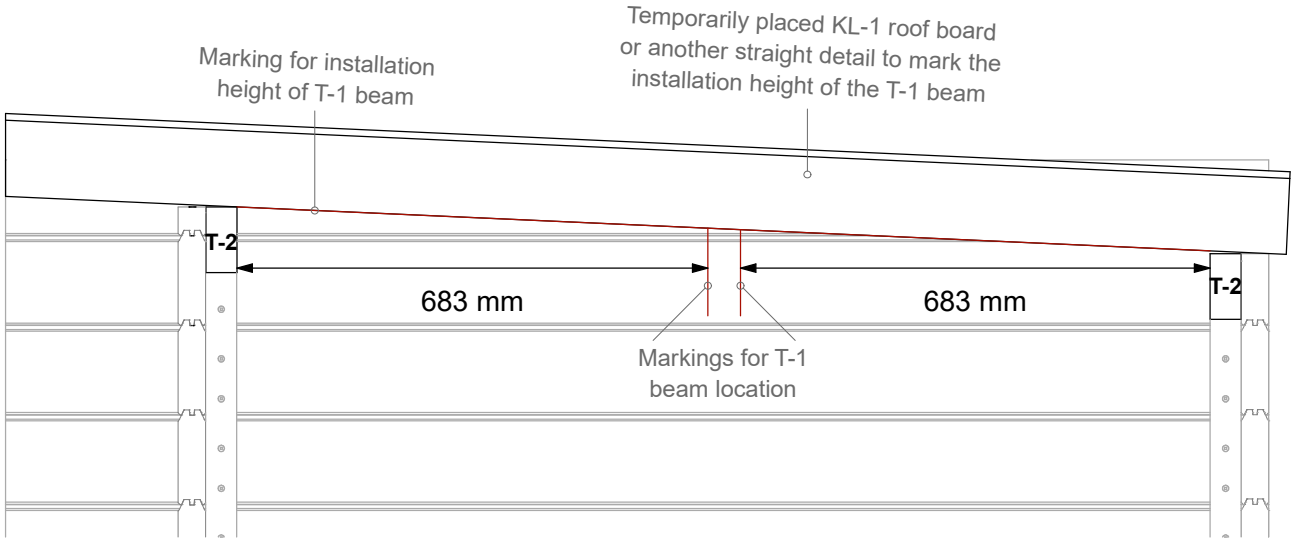

Scheme 3.2

STEP 3 - Roof boards and ceiling

3.3 Attach the joist hangers to the T-1 ceiling beam, flush with the beam ends. Use 5x40 screws.



3.4 Fasten the T-1 ceiling beam to the side walls through the joist hangers in the previously marked location, like shown in Scheme 3.3. Use 5x40 screws to fix the joist hangers to the beam and the walls.

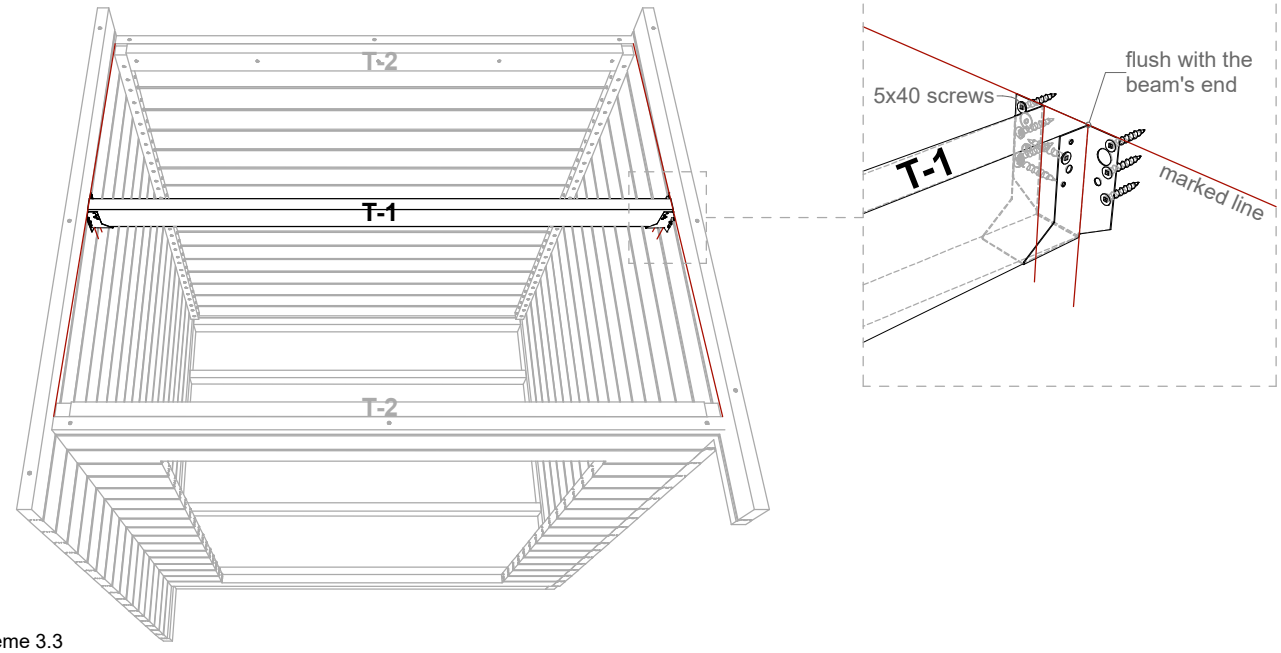

Scheme 3.3

3.5 Install the roof boards flush with the side walls, starting from the right. Fix the roof boards with 70 mm nails to the beams (6 nails per every roof board) with a hammer or a nailgun. Cut the last roof board to width using a circular saw.



3.6 When all the roof boards are installed, fasten the T-1 beam under them, flush with the roof boards at the front, like shown in Scheme 3.4. Use 60x60x60 angle brackets and 5x40 screws for fixing.



3.7 Measure the distance from the roof boards to the bottom edge of the T-1 beam and mark it on Wall 2 (front). That line will indicate the installation height of the T-3 beam. Fix it in place with 4.5x70 screws.

3.8 Install the 01F roof block on top of the roof boards, flush with the front edge. Fix with 4.5x70 screws.

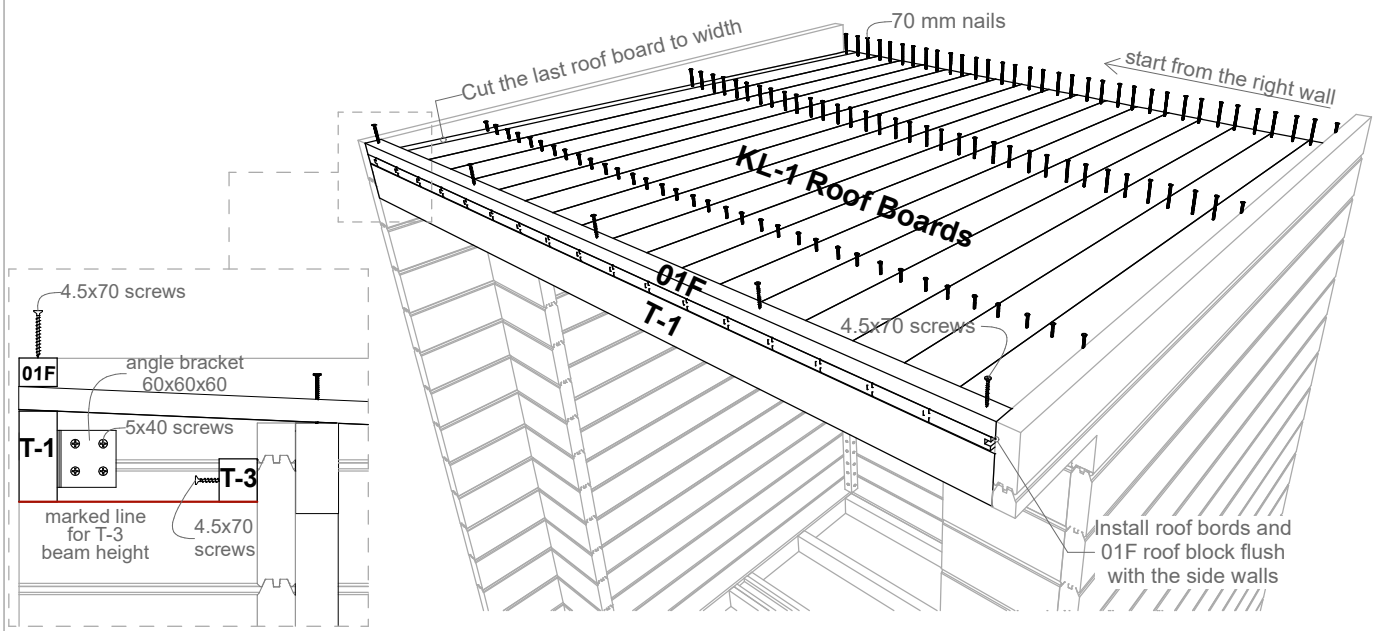

Scheme 3.4

STEP 3 - Roof boards and ceiling

3.9 Cut the SPU insulation panels to the right size using a cutting knife. Make cutouts in the corners for corner posts. Attach the panels to the ceiling beams using a few 4.5x70 screws. Tape all edges and joints with foil tape to prevent heat loss, like shown in Scheme 3.5.

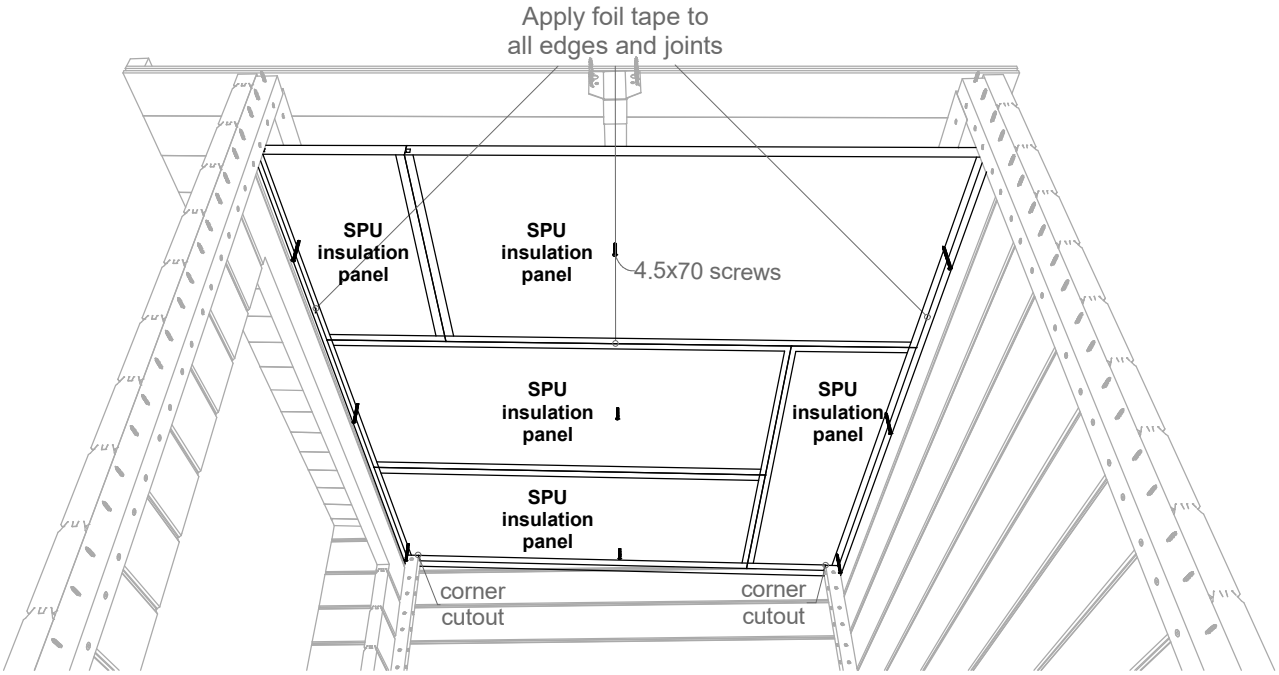

Scheme 3.5

3.10 Place the DI-2 and DI-3 ceiling distance boards on top of the insulation panels and fasten them to the ceiling beams using 4.5x70 screws.

3.11 Install the ceiling lining boards. Leave ~3 mm gap between the ceiling boards and walls on all sides. Use 40 mm lost-head nails (3 per every ceiling board) and a hammer or nail gun for fixing. Make corner cutouts in the first and last ceiling boards for corner posts with a hand saw, and cut the last ceiling board to width using a circular saw (Scheme 3.6).

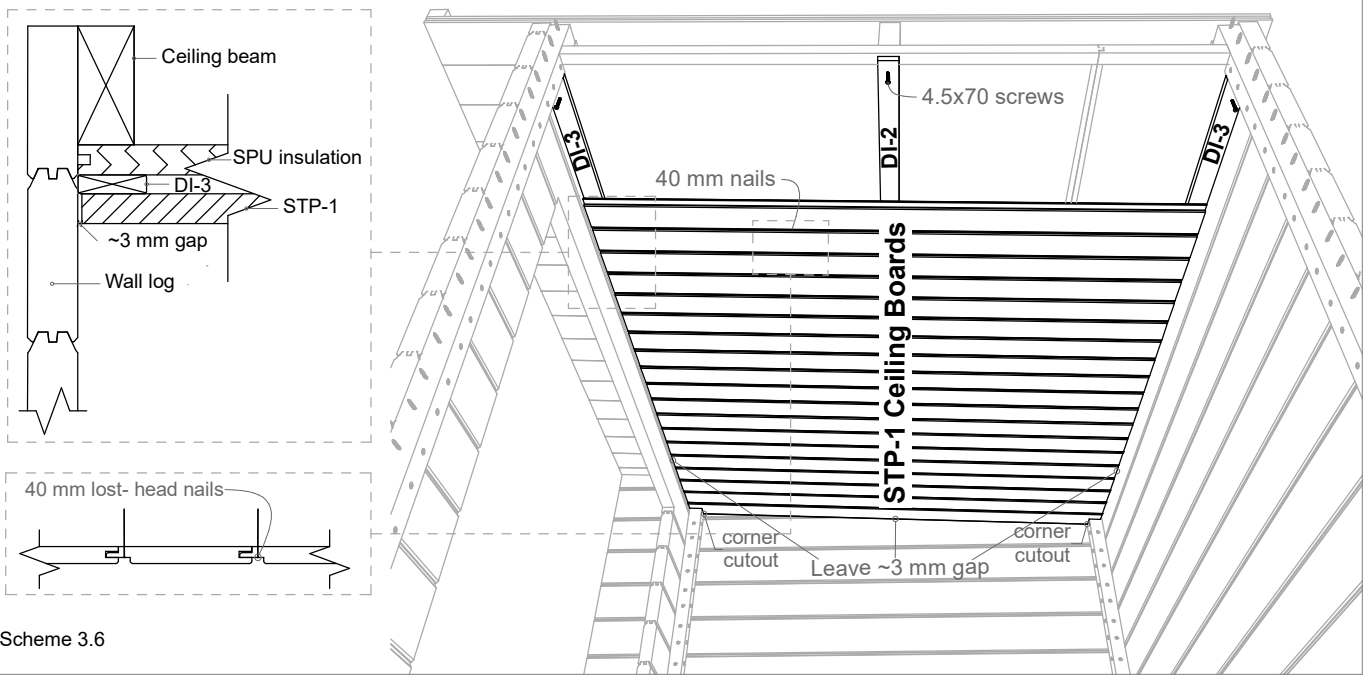

Scheme 3.6

STEP 4 - Floor

4.1 Place the slope veneers on the base frame to give the floor a slope for water drainage. Fixing the details to the base frame with screws is optional (Scheme 4.1).



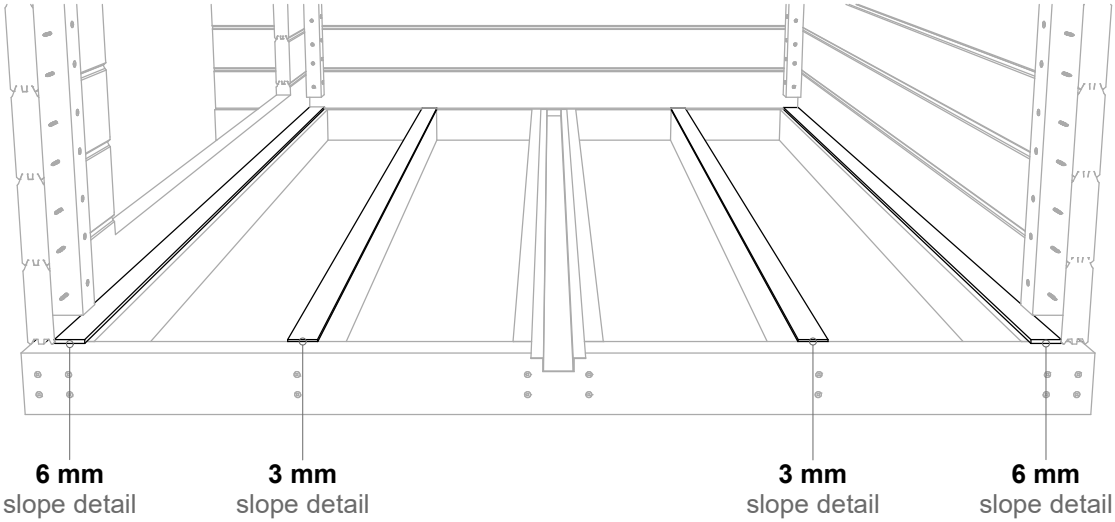

Scheme 4.1

4.2 Install the floor boards starting from the right. Leave ~3 mm gap between the floor boards and walls at all sides. Cut the last floor board to width using a circular saw. Use 3.5x50 screws to fix the floor boards in place (Scheme 4.2).



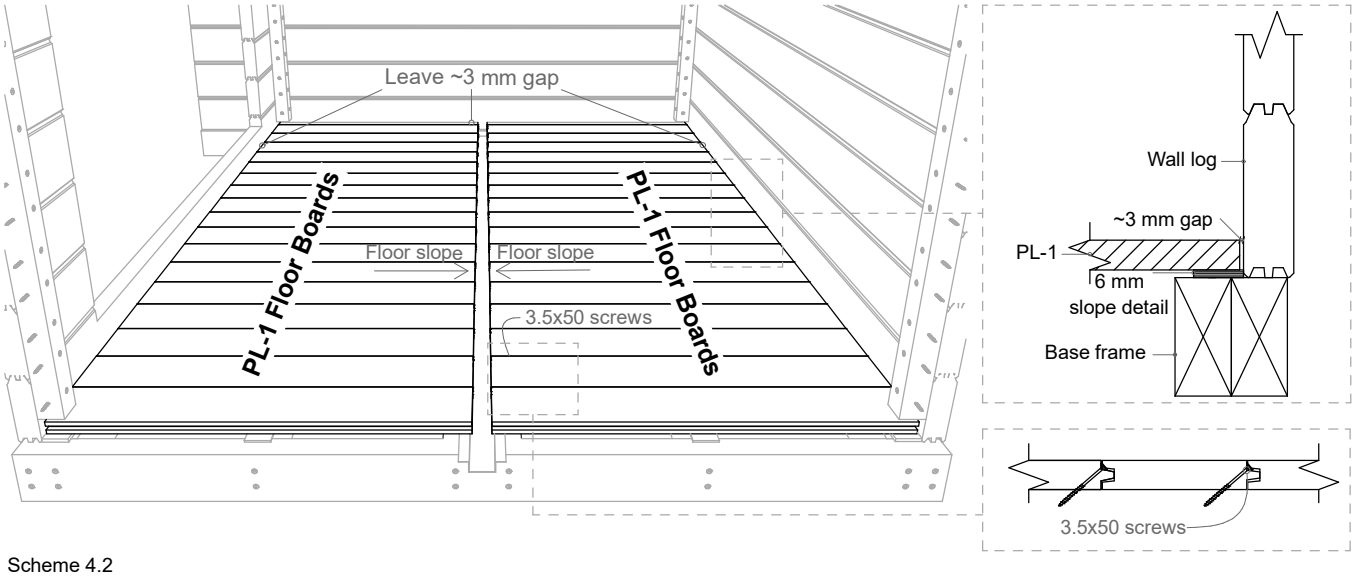

Scheme 4.2

STEP 5 - Doors and windows

5.1 Connect the door and window together by attaching the UR-1 and UR-2 frame details around them using 4.5x70 screws (Scheme 5.1). **Attention!** When installing the window, make sure that the inclined frame is located indoors, at the bottom of the window. The bottom side is marked with a sticker.



5.2 Lift and tilt the door and window diagonally into the opening (Scheme 5.2). Place them to their positions from inside the sauna. For easier installation, remove the glass from the door hinges to reduce the weight of the door.

5.3 Fix the door and window frames to Wall 2 (front) from the outside using 4.5x70 screws. Attach the glass back to the door hinges and fix the door handles to the glass door. (Scheme 5.3).



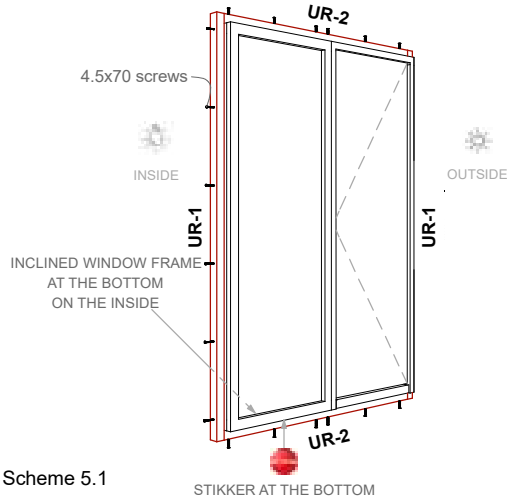

Scheme 5.1

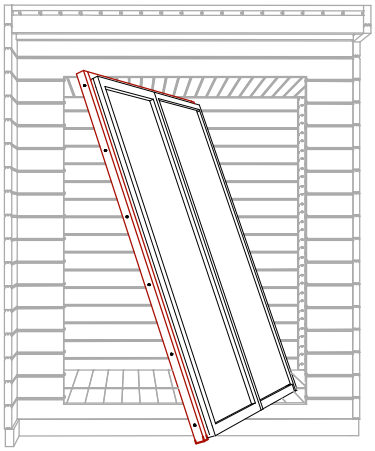

Scheme 5.2

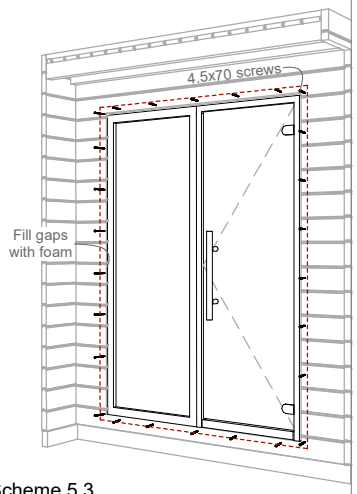

Scheme 5.3

STEP 6 - Ventilation

6.1 Cut the ventilation holes in the walls with a diameter of 100 mm using a hole saw or a jigsaw. For recommended locations of ventilation openings see Scheme 6.1



Wall A (left)

View from the outside

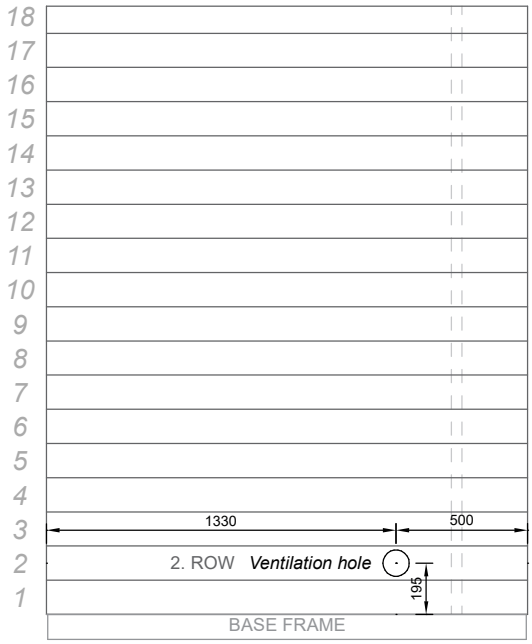

Wall 1 (back)

View from the outside

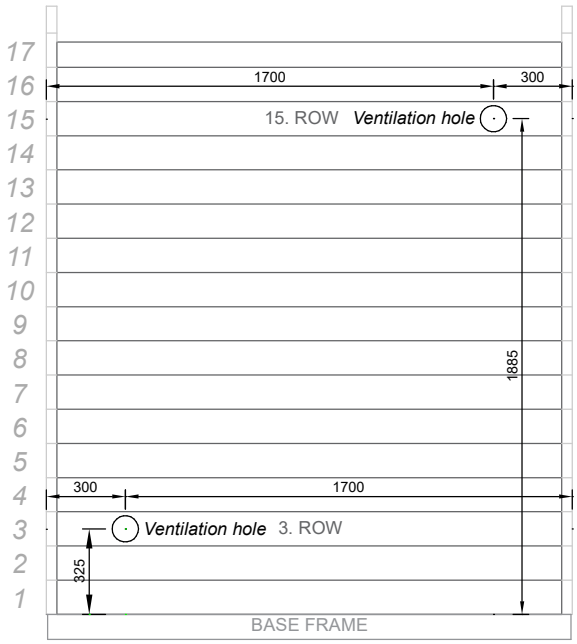

Scheme 6.1

STEP 6 - Ventilation

6.2 Cover the openings with ventilation grids or valves, as shown in Scheme 6.2. Use 3.5x40 black screws for fixing.



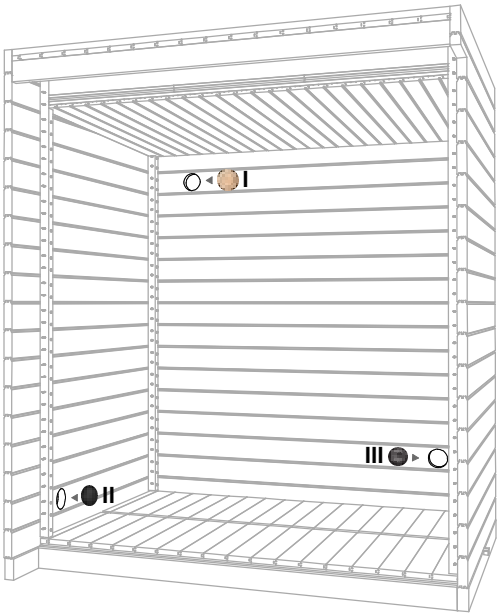

Scheme 6.2

I - EXHAUST OPENING
Install the metal ventilation grid on the outside and the wooden valve on the inside.
The exhaust opening with the valve inside is located under the ceiling, and its purpose is to dry the steam room after using the sauna. The ventilation valve should be closed while using the sauna. Open the valve after using the sauna to expel excess moisture through the opening.
For faster drying, leave the steam room door ajar after a sauna session.
The ventilation valve can also be opened between steam sessions if there are many people in the steam room at the same time and excessive humidity or a lack of air occurs.

II - INLET
Install a metal ventilation grid inside and outside.

III - OUTLET
Install a metal ventilation grid inside and outside.

STEP 7 - Outer lining and moldings

7.1 Seal all the outside corners of the sauna with transparent silicone to prevent moisture and rainwater from entering the sauna, as shown in Scheme 7.1. Apply silicone to the open end grains at the back wall and spread it with a spatula to about 1 mm thickness.

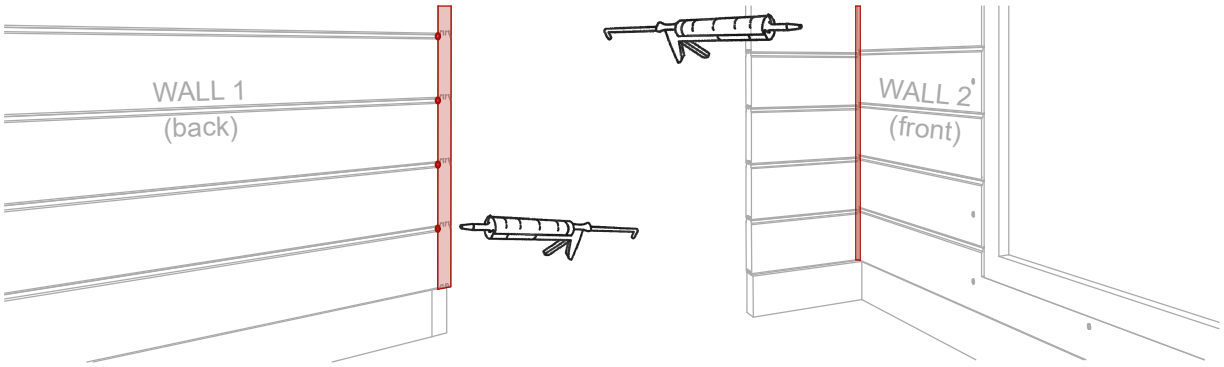

Scheme 7.1

7.2 For extra protection, tape all outside corners of the sauna with moisture safety tape before installing the exterior moldings (Scheme 7.2).



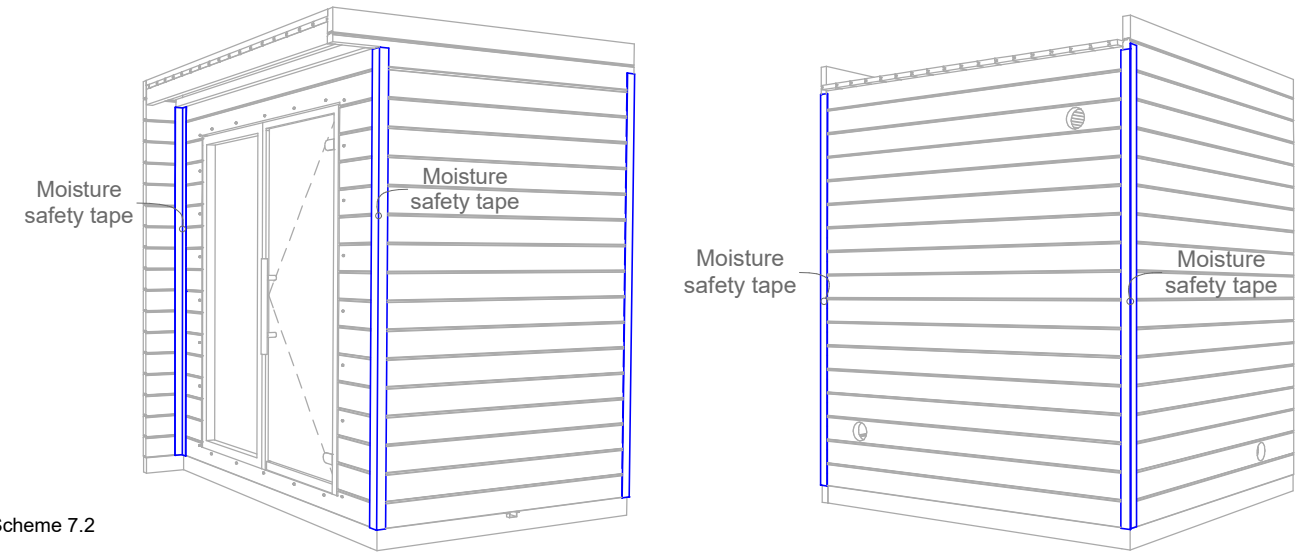

Scheme 7.2

STEP 7 - Outer lining and moldings

7.3 Measure the height of the extending part of the side wall and cut the DI-1 and DI-2 distance boards to the correct length if necessary. Attach the distance boards to the walls and roof boards using 3x40 screws.



7.4 Install the STP-2 outer lining boards on top of the distance boards and roof beams, starting from the bottom. Cut the last lining board to the correct width. Use 40 mm lost-head nails to fasten the lining boards (2 nails per board). See Scheme 7.3.

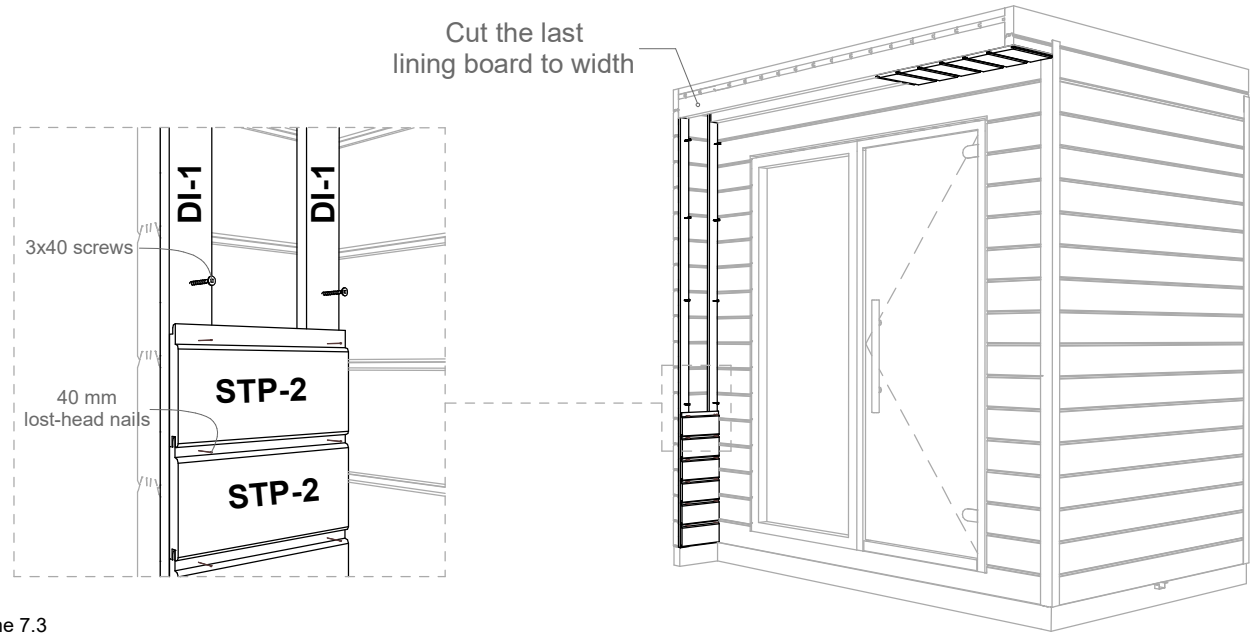

Scheme 7.3

7.5 First, fix the L-2 roof moldings to the side walls. The moldings must be installed flush with the upper edges of the side walls. Cut the moldings to length and fasten using 3x40 black screws.



7.6 Next, measure and cut to length the L-2 roof molding at the front and fasten it to the roof block and side walls.



7.7 Make corner cutouts in L-1 corner moldings, as marked in Scheme 7.4. Cut to length and use 3x40 black screws to fasten all the corner moldings.



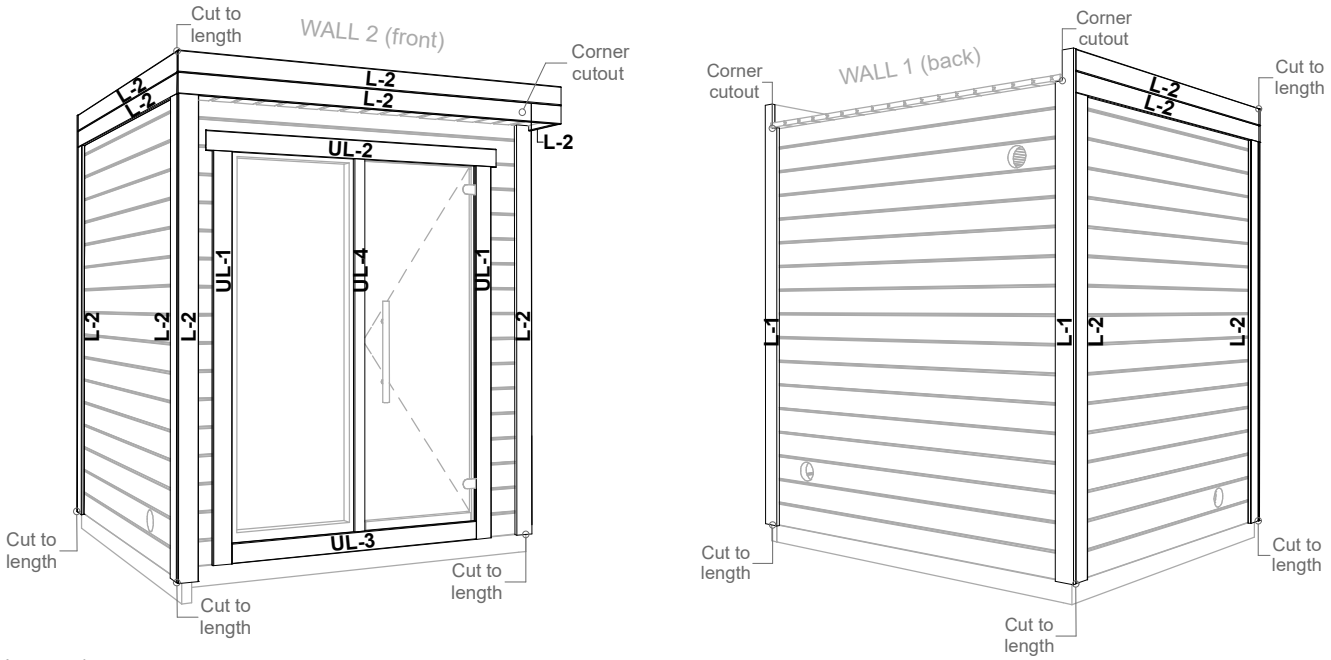

Scheme 7.4

STEP 7 - Outer lining and moldings

7.7 Install the moldings around the door and window using 3x40 black screws.
For the correct overlay, see Scheme 7.5.

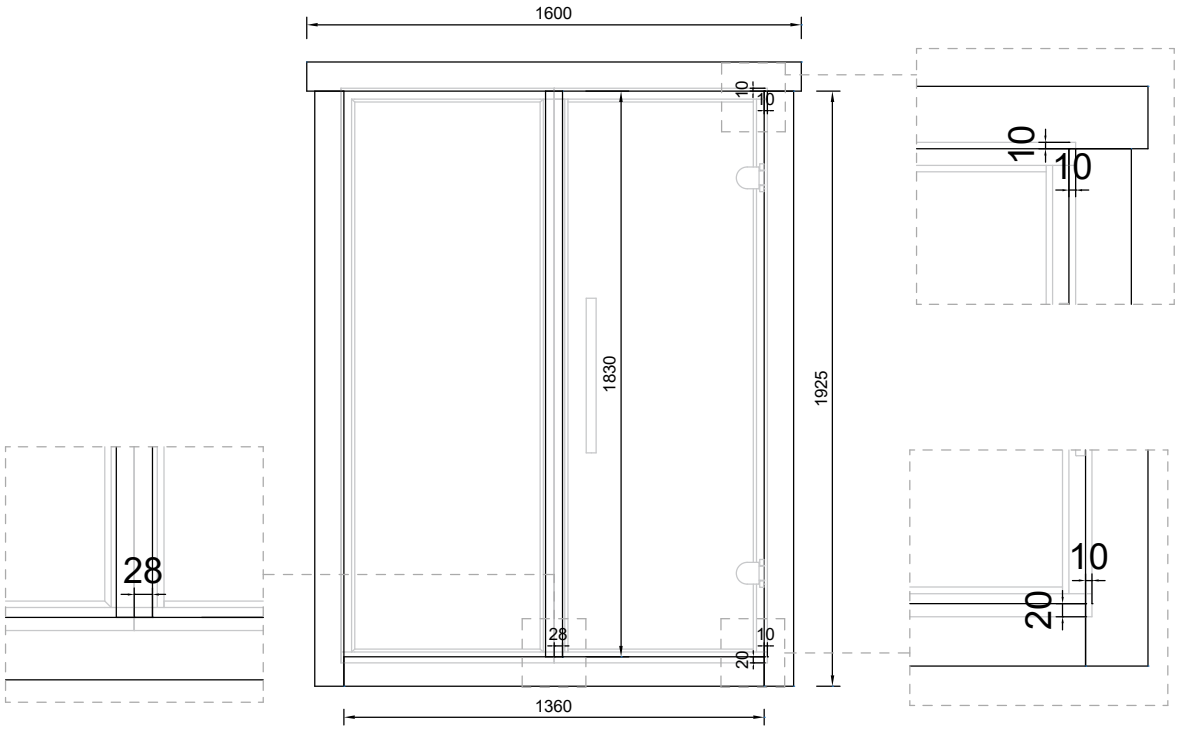

Scheme 7.5

7.8 Paint over the window frames from the outside and all cut ends of the moldings with black paint that is included with the sauna.

STEP 8 - Sauna benches

8.1 Measure the distance and fix the upper and lower bench supports to the walls according to Scheme 8.1.
Use 4.5x70 screws for fixing.
It is recommended to additionally use glue (not included) for fixing the sauna bench supports to the wall.

View from the front:

View from the side:

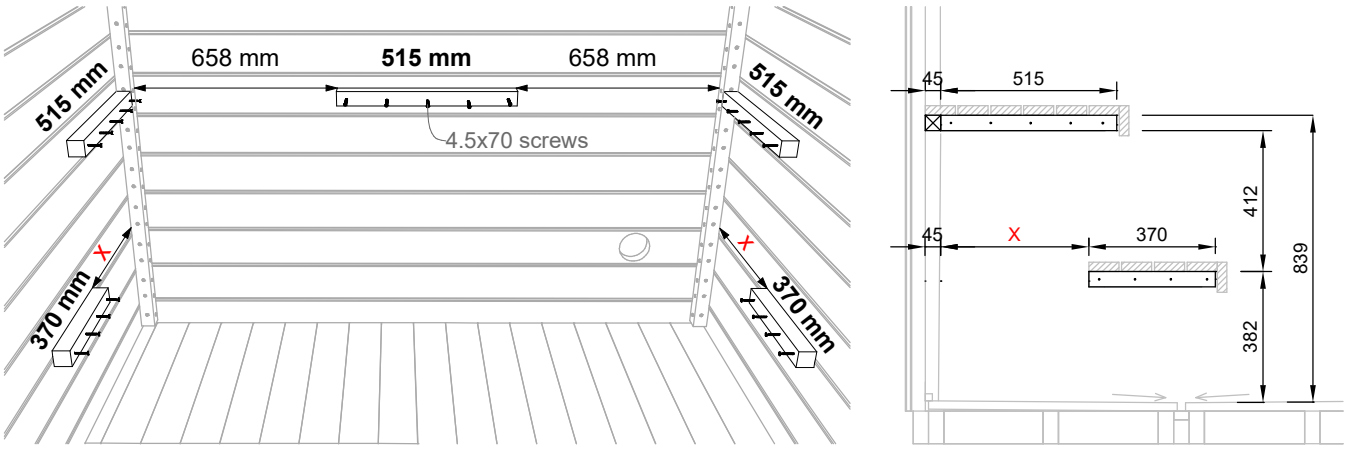

Scheme 8.1

**X – The distance from the back wall to the lower bench support depends on the heater model.
Refer to the heater installation manual for the required safety clearances and position the support accordingly.**

STEP 8 - Sauna benches

8.2 Lift and place the bottom benches on top of the supports. If LED lighting under the sauna benches has been ordered additionally (not included in the standard set), install the LED strips under the benches before placing them on top of the supports. More detailed instructions are included with the lighting details.

8.3 Set the bench skirt in place. Leave a 8 mm gap between the skirt and the lower bench. Fix the skirt side frames to the side walls and the middle frame to the bottom bench, using 4x70 screws. See Scheme 8.2

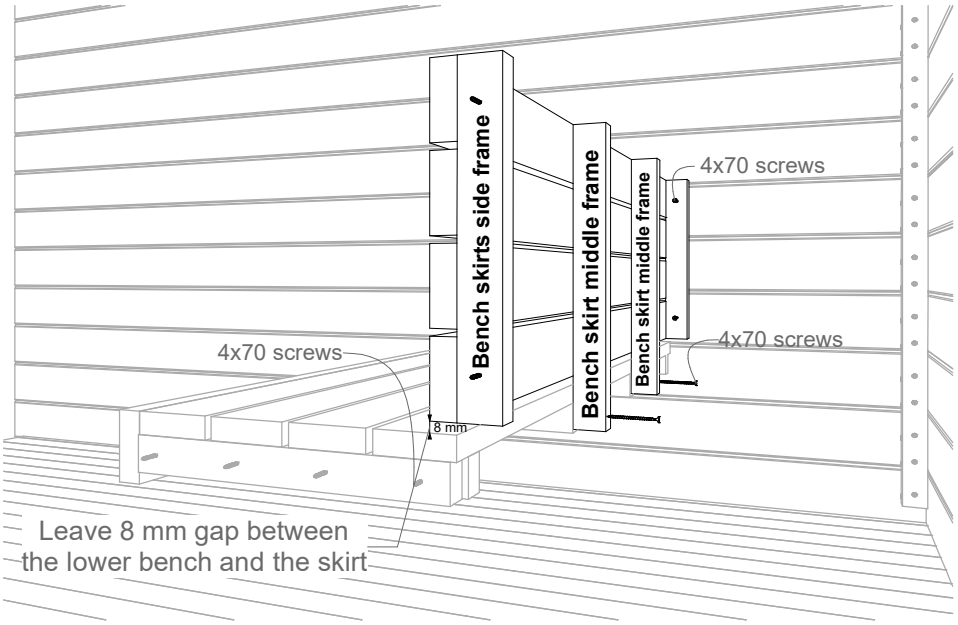

Scheme 8.2

8.4 Lift and place the top benches on top of the supports. Leave ~4 mm gap on the sides. See Scheme 8.3.



8.5 Fix all the benches to the horizontal supports through the bottom frame using 4.5x70 screws.
Do not fully tighten the screws.

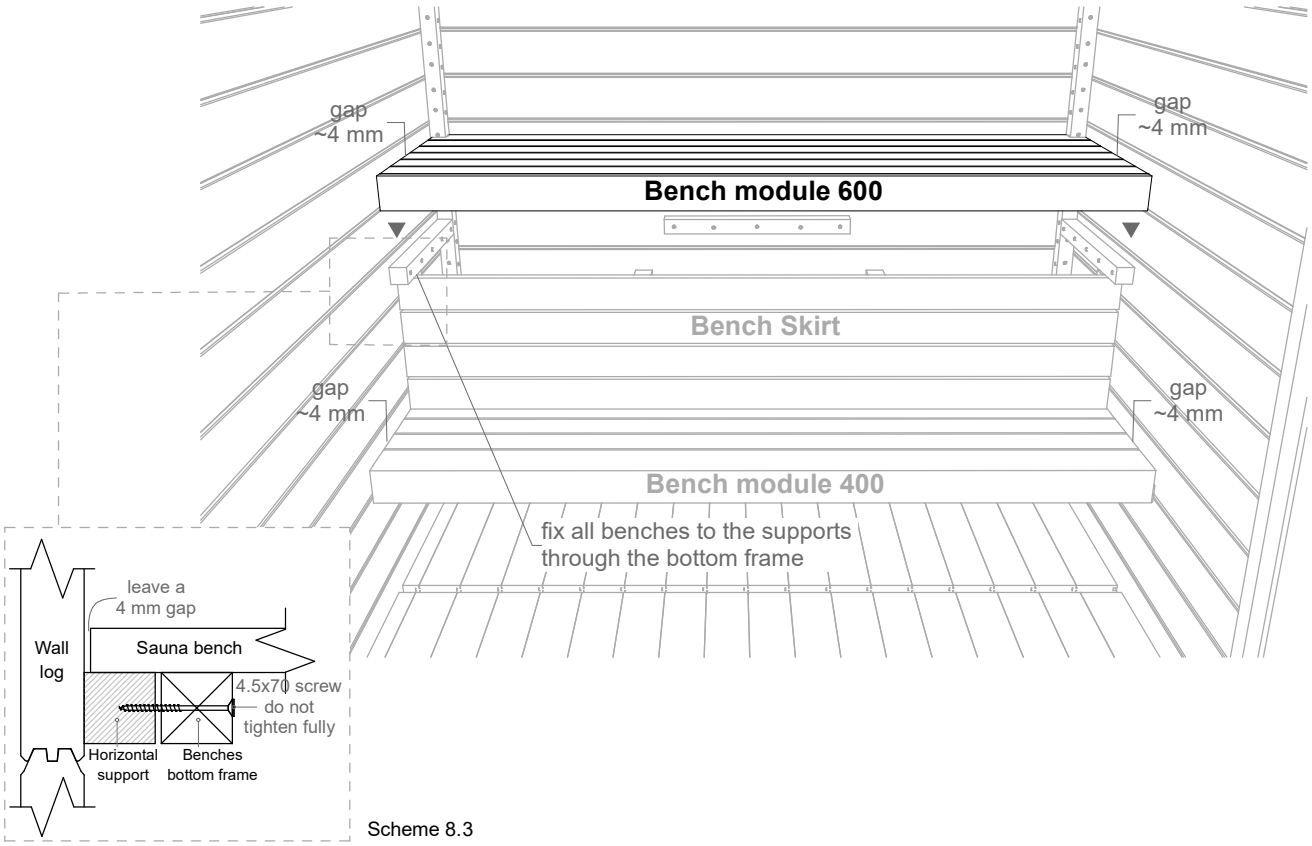

Scheme 8.3

STEP 9 - Interior moldings

9.1 Measure and cut to length all DI-0 corner post moldings with a handsaw.
Install DI-0 corner molding on top of the corner posts, under and above the sauna bench, like shown in Scheme 9.1. Fasten the moldings with 40 mm lost-head nails, using a nail gun or a hammer.

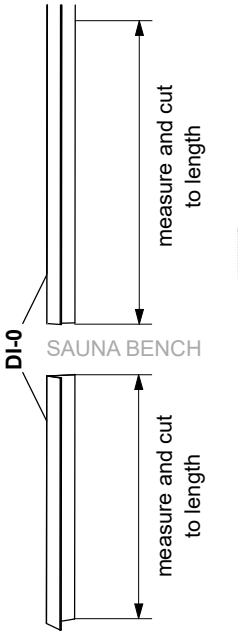

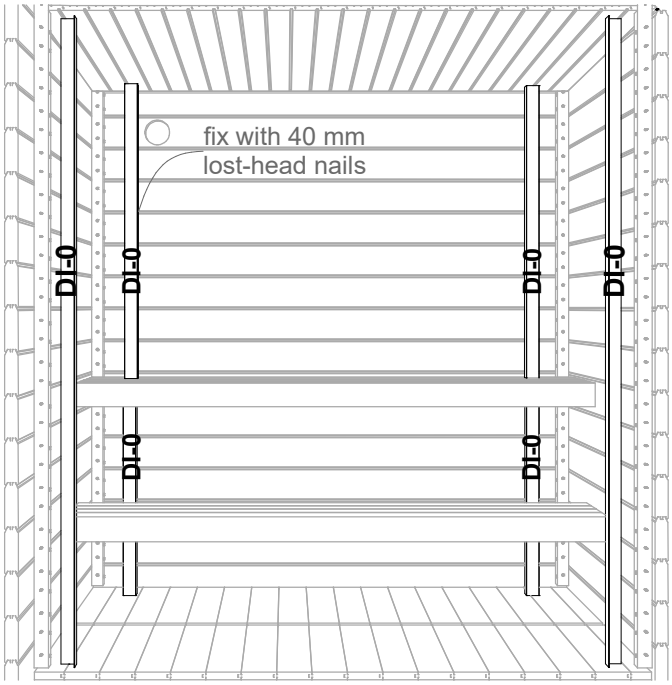

Scheme 9.1

9.2 Measure and cut to length all DI-00 ceiling and floor moldings and fasten them with 40 mm lost-head nails. Use a nailgun or a hammer (Scheme 9.2).

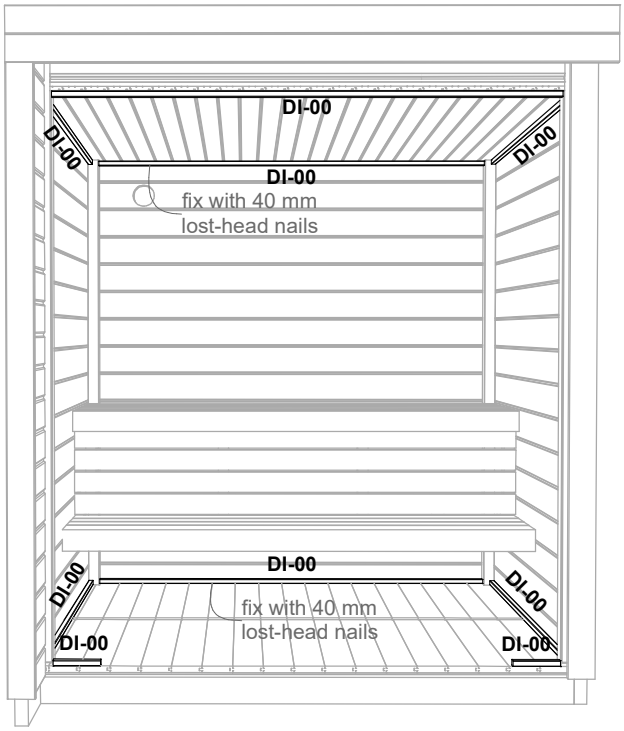

Scheme 9.2

Sauna Backrests

Install the back rest approximately 500 mm higher from the top bench.

Use 4x40 screws to fix the back rest in place and cover the screw heads with wooden cover caps.

It is recommended to additionally use glue to fix the back rest to the wall.

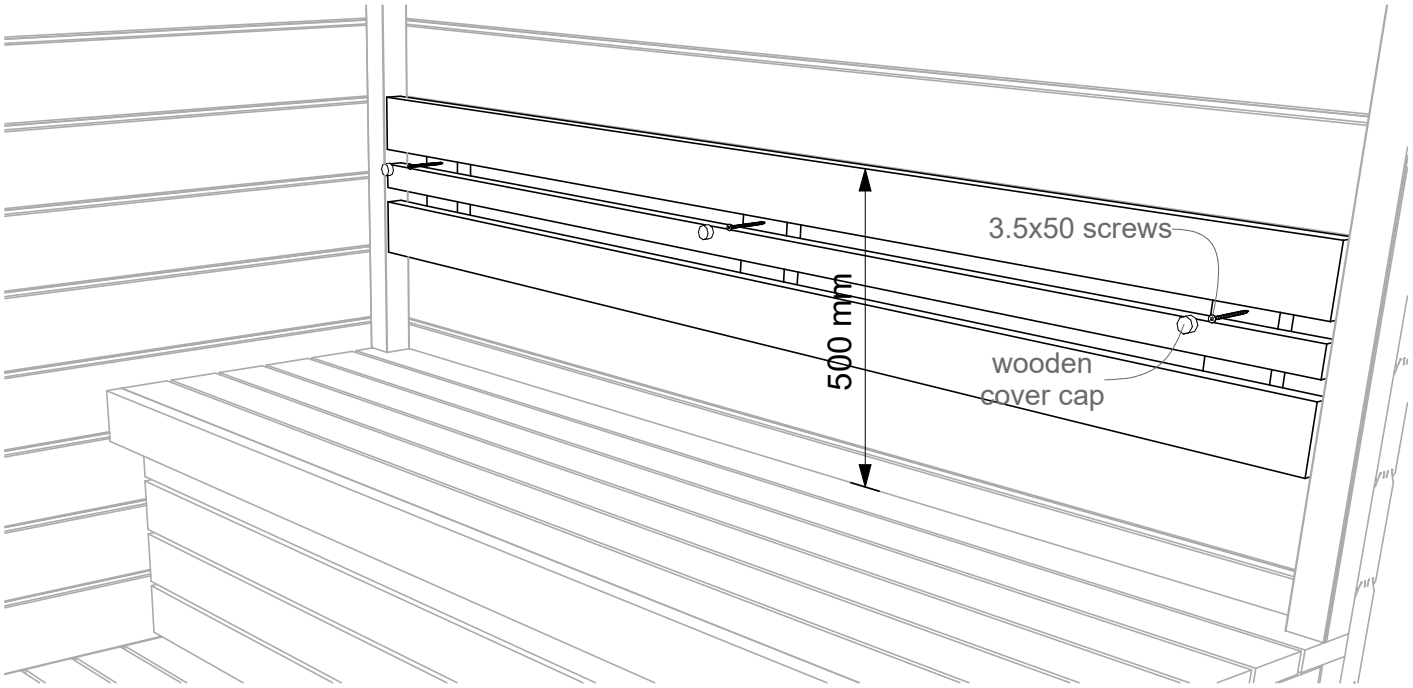

STEP 10 - Roof covering and roofing sheets

10.1 Measure the overall width of the sauna and cut the metal drip edge to that length minus 2 mm using sheet metal scissors. Remember to wear gloves for protection while cutting.



10.2 Measure and mark 58 mm on the top side of the drip edge at both ends, then cut out these marked sections as shown in Scheme 10.1.

10.3 Place the drip edge on top of the roof boards and secure it using 4.2x25 black Wronic screws. Space the screws approximately 200 mm apart, as shown in Scheme 10.2.



Back wall metal drip edge:

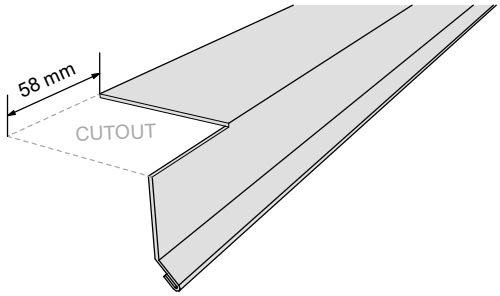

Scheme 10.1

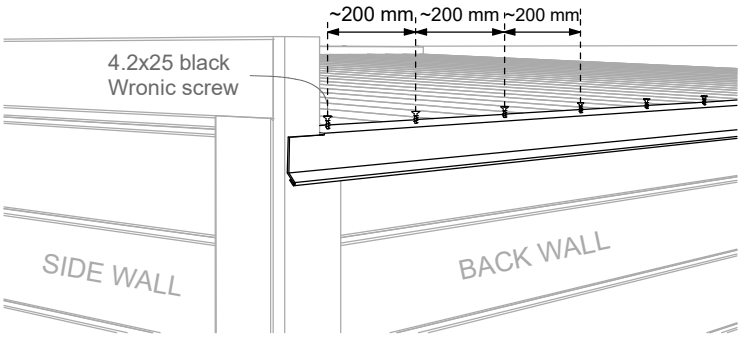

Scheme 10.2

10.4 Roughen the upper surface of the drip edge with a sanding pad, then apply EPDM Quickprime primer on top. Cut the double-sided splice tape to length, remove the cover from one side, and place it on the primer-coated drip edge. Do not remove the cover from the top side of the tape at this stage!



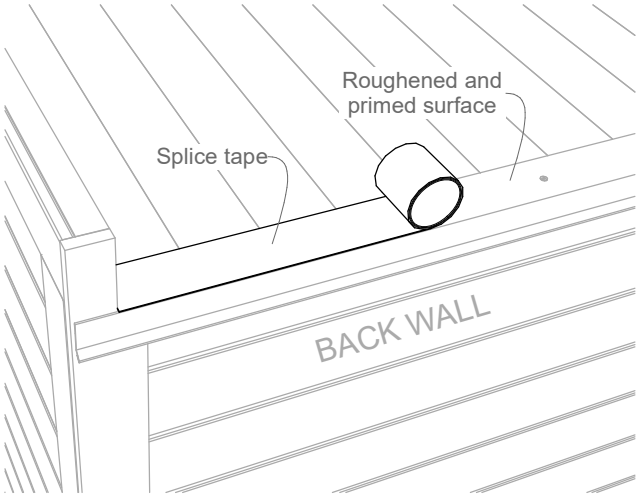

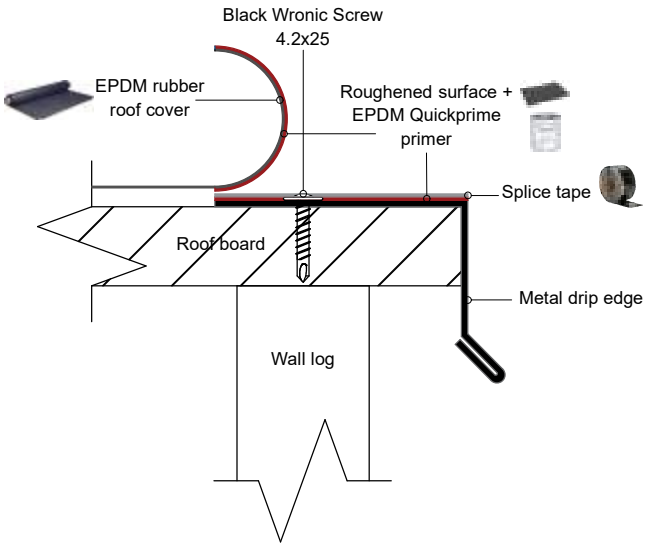

Scheme 10.3

STEP 10 - Roof covering and roofing sheets



10.5 Clear the roof of all debris and fasteners, and thoroughly clean the surface to eliminate dirt, dust, ice, snow, water, and any other contaminants.

10.6 Before and during installation, check the packaging and EPDM roll for any damage. Position the rubber roof cover carefully, ensuring it is parallel to the walls and extends evenly on both sides of the sauna.



10.7 Fold back half of the roof cover and begin applying glue to both the roof boards and the rubber. Leave approximately 10 cm of the back wall without glue to allow for attachment to the splice tape later. Do not apply glue to the side walls at this stage; that section will be glued later. Always work in a well-ventilated area and wear gloves, safety goggles, and a respirator for safety (Image 2).



10.8 ATTENTION! Wait until the glue is dry to the touch on both surfaces (approximately 15 minutes or longer) before folding the rubber back into place. Allowing adequate waiting time is crucial to prevent bubbling in the rubber once it is set.

10.9 Turn the glue-coated rubber onto the prepared roof boards and smooth it out with a broom or brush, ensuring that no wrinkles or bubbles form. Repeat this process with the other half of the roof cover, and then glue the rubber to the side walls.

10.10 Roughen the rubber at the back wall using a sanding pad, then apply EPDM Quickprime primer on top. Remove the top cover from the double-sided splice tape and press the primed rubber onto it. Trim any excess material from all sides using scissors (see Scheme 10.4).

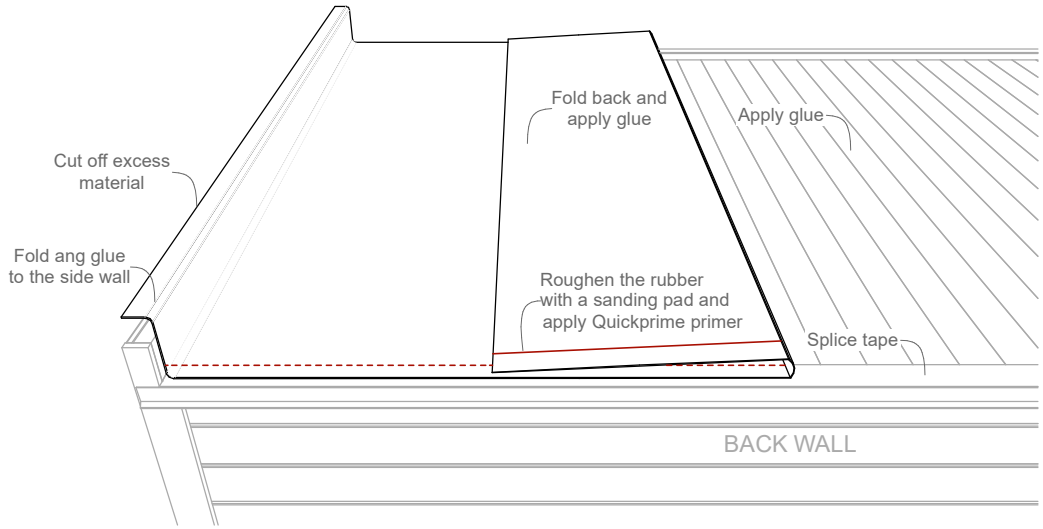

Scheme 10.4



10.9 Measure the overall depth of the sauna, add 160 mm to that measurement, and then cut the side wall roofing sheets to length using sheet metal scissors. Be sure to wear gloves for protection while cutting.

10.10 At the rear end, cut off 45 mm from the inner side of the roofing sheet as shown in Scheme 10.5. At the front end, cut off 58 mm from the inner side of the roofing sheet as indicated in Scheme 10.6.

Side wall roofing sheet (rear end):

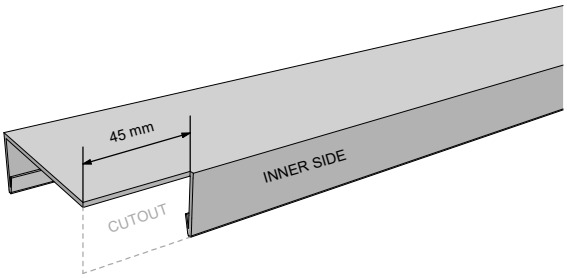

Scheme 10.5

Side wall roofing sheet (front end):

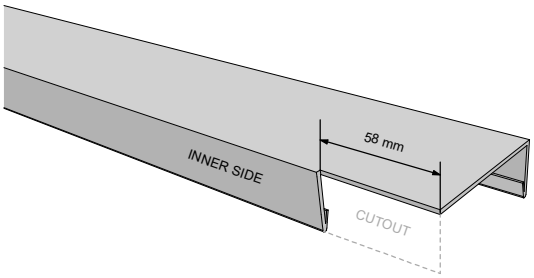

Scheme 10.6

STEP 10 - Roof covering and roofing sheets

10.11 Install both side wall roofing sheets in place. Measure 160 mm at the rear end and make a slanted cutout. Use pliers to bend the end downward and secure it with a 4.8x25 roofing screw (see Scheme 10.7).



10.12 Measure the overall width of the sauna and cut the front wall metal roofing sheet to length. Cut off 68 mm from the inner side of the front wall roofing sheet at both ends, as shown in Scheme 10.8.

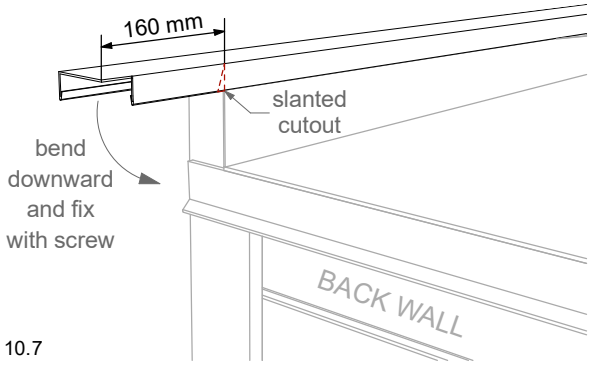

Scheme 10.7

Front wall roofing sheet:

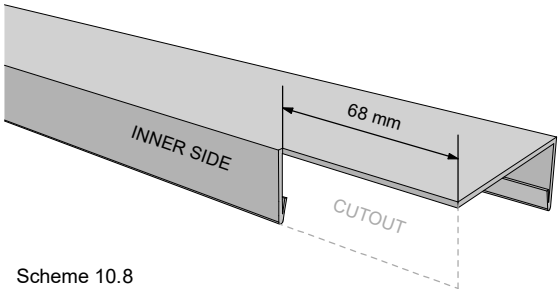

Scheme 10.8

10.12 If the front wall sheet consists of two parts, align the sheets by overlapping them by 10 mm, as shown in Scheme 10.9.

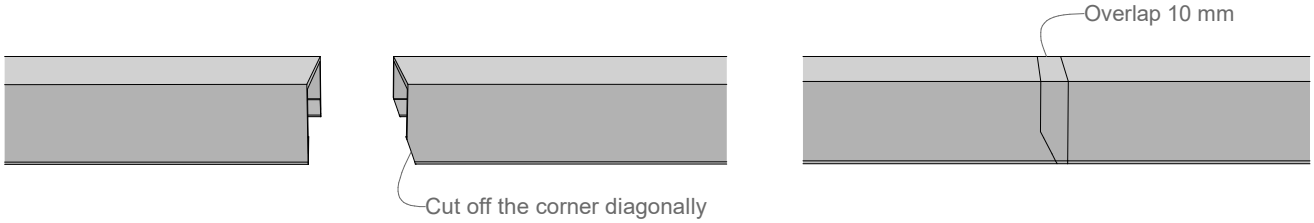

Scheme 10.9

10.12 Secure all the roofing sheets to the side walls and the roof block at the front using 4.8x25 black roofing screws. Space the screws approximately 300 mm apart, as shown in Scheme 10.10.



Side wall metal roofing sheet:

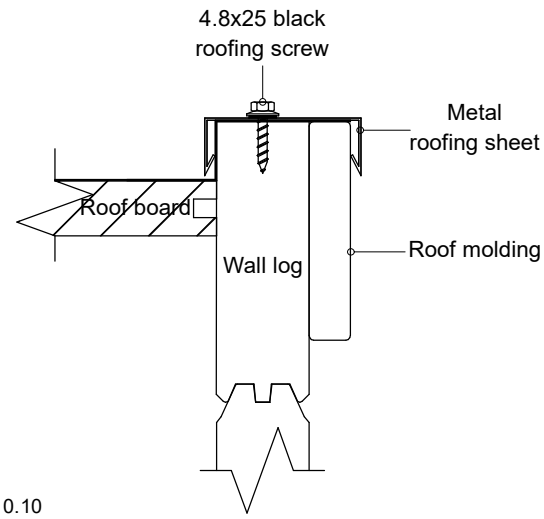

Front wall metal roofing sheet:

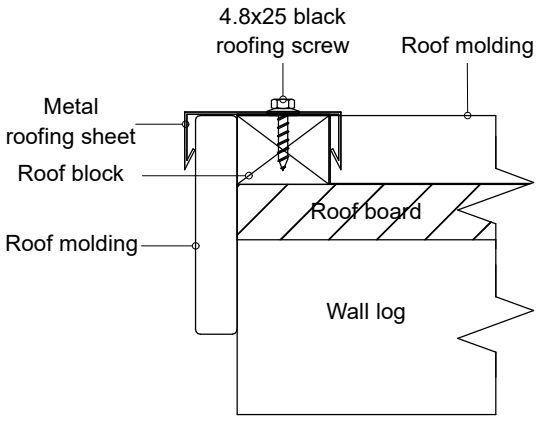

Scheme 10.10

Congratulations on a job well done!

You've successfully completed the installation and will soon be able to enjoy your new sauna.

Before your first use, please take a moment to read the maintenance and warranty guide, and make sure to complete the necessary actions. Enjoy your relaxing sauna experience!

Sauna Treatment and Maintenance Instructions

Before First Use:

Treat all interior surfaces, including walls, ceilings, door frames, thresholds, and window frames in both the steam room and anteroom, with a protective wood solution.
This treatment protects the wood from humidity and dirt and improves durability.

Benches and Footrests:

Treat with a protective oil such as **Tikkurila Supi Laudesuoja** or a similar locally available product. Repeat once or twice a year to maintain the wood's condition and appearance.

Interior Surfaces:

Before first use, and annually thereafter, treat the walls, ceilings, door frames, thresholds, window frames, and floors. We recommend using one of the following products for this purpose, but you may substitute them with an available alternative:

Teknos Satu Saunasoja
Tikkurila Satu Saunasoja

These products help maintain the wood's appearance and protect against moisture and heat.

For complete protection of all interior sauna surfaces, including the benches, you can use **Tikkurila Supi Sauna Wax** or a similar locally available product.

Exterior Surfaces:

Apply the first protective coating to all exterior wooden surfaces immediately after installation. Reapply after about two months to protect against UV damage and weathering. Regular maintenance is essential for long-term durability. Maintenance frequency depends on the coating product used.

Please note that the seller is not responsible for any damage caused by insufficient or neglected maintenance.

Warranty

The products come with a 24-month warranty period covering material and production defects, effective from the delivery of the sauna to the client.

The warranty is valid only if the user has reviewed and follows the user manuals. It does not cover natural characteristics of wood, such as discoloration or cracks resulting from fluctuating or excessive humidity.

Additionally, the warranty does not cover normal wear and tear or any damage caused by incorrect installation or use. Damage resulting from thunder or other weather phenomena is also excluded.

The warranty will be voided if attempts are made to change or fix the product independently, or if it is not used for its intended purpose. Improper storage conditions will also void the warranty.

To ensure the warranty remains valid, the buyer must inform the seller of any defects within a reasonable timeframe (7 days).